Zennio®

Residential, Commercial and Hotel **Automation Solutions**

Index

Z100 - Z70 - Z50	06
Z40 - Z35 - Z28	28
Flat	40
Tecla	64
Presentia W	86
Switches & Sockets ZS55	92
Video Intercom GetFace IP	124
Access Control	138
Actuators	152

Z50

Z100

Z70

Touch Panels

Z100 - Z70 - Z50

We introduce you to Zennio's Z's...

...who have everything you could expect from the most advanced touch screens in the market, starting with a demanding list of requirements:

- Full control of any installation with end user flexibility to program their own scenes, sequences using macros, timers for screen controls...
- Smartphone control with the same interface as the touch panel to make control easier and more intuitive
- Video intercom remote answering and opening so you really have full control of your installation
- Voice control: everything at reach without leaving the sofa!

But beyond functionality, our touch panels stand out for their aesthetics, providing additional distinction to the room they are installed in.

INDEX

A 10/10 touch panel

Z100 is the top of Zennio's Z's range. With its stylish appearance, Z100 makes any room in which it is installed a bit extra glamorous.

How is it? Flat, compact and elegant. We could not define it better.

INDEX

Z70 - 7"

Wall-mounted Z70 on a house
on Costa del Sol (Malaga).

The qualitative leap we were waiting for

7-inch touch panel with licensed functionality to increase capabilities according to customer needs. With up to 144 control points, it stands out for its intuitive control, appealing and friendly user interface and, of course, the display quality.

INDEX

A piece of art

Z50 has everything you are looking for in the touch panel that will become the heart of your smart home. Starting with the straight lines design, elegant and minimalistic, all the way up to its capabilities: in just 5 inches you will have full control of your KNX installation, including remote control, video intercom functionality and voice control. What else could you ask for?

INDEX

“Alexa! Say thank you to Zennio for making my life easier”

There is nothing like controlling everything around you by just asking. Zennio makes this possible thanks to ZenVoice, a license for Z50/Z70/Z100 that allows you to use Alexa and Google voice assistants in your KNX installation without any extra device, just your Zennio touch panel.

Full management and control for any building

Get a comfortable air temperature, lighting with the appropriate dimming in each room, close all the blinds or manage the multimedia system with just one button. A system that fits your routine with configurable timers and receives technical alarms such as gas, smoke or flooding. Monitor energy consumptions centrally and start saving.

INDEX

Home sweet home... at your fingertips and under control

If anything gives us peace of mind it is knowing everything is under control. Zennio gives you the peace of knowing your home is under control wherever you are. This is thanks to Zennio's remote control apps, which allow you to control and monitor any part of your installation from anywhere in the world.

Compatibility with others SIP video intercom on the market

Choose the video intercom that you like the most, but always choose Zennio.

Now it is possible to integrate Z50, Z70 and Z100 touch-panels with any SIP video intercom on the market.

Communication with market leading brands such as Fermax, Doorbird, Comelit, Akuvox and 2N plus custom integration with other SIP based brands.

Allow visitors to benefit from exceptional image and sound quality through an intuitive and elegant interface.

FERMAX

COMELIT

Akuvox

DoorBird

2N

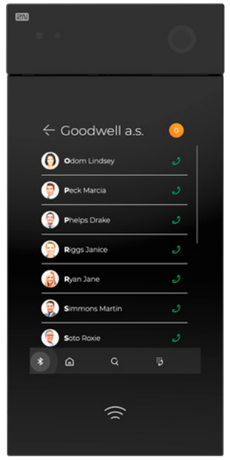

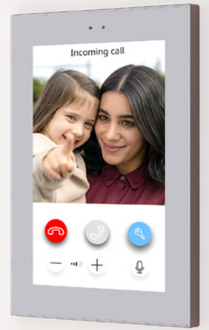

INDEX

References and specifications

	Z50	Z70	Z100
Display size	5”	7”	10”
Controls and indicators in standard pages	96	144	180
Thermostats	2	2	2
IP camera visualization	✓	✓	✓
Screensaver	✓	✓	✓
Multilanguage	✓	✓	✓
Custom icons	✓	✓	✓
Technical alarms	✓	✓	✓
Timers	✓	✓	✓
Temperature sensor	✓	✓	-
Proximity sensor	✓	✓	✓
Luminosity sensor for brightness automatic adjustment	✓	✓	✓
4 colours available (anthracite/white/champagne/silver)	✓	✓	✓
Analogue-digital inputs	2	4	4
Installation in European, British, Italian, American or Australian standard single back box	✓	-	-
Installation in European double or British double standard back box	-	✓	✓
Remote control (Ethernet)	Under license	Under license	Under license
Video intercom and internal calls	Under license	Under license	Under license
Voice control	Under license	Under license	Under license

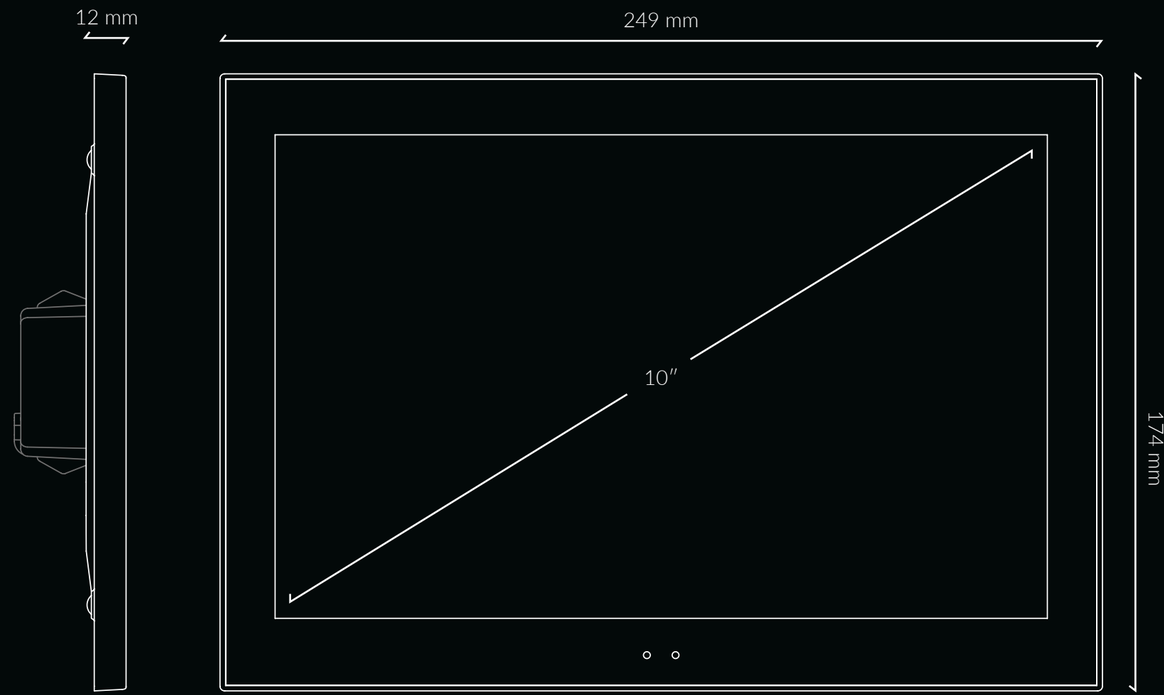

ZVIZ100

INDEX

References and specifications

	Z50	Z70	Z100
Display size	5”	7”	10”
Controls and indicators in standard pages	96	144	180
Thermostats	2	2	2
IP camera visualization	✓	✓	✓
Screensaver	✓	✓	✓
Multilanguage	✓	✓	✓
Custom icons	✓	✓	✓
Technical alarms	✓	✓	✓
Timers	✓	✓	✓
Temperature sensor	✓	✓	-
Proximity sensor	✓	✓	✓
Luminosity sensor for brightness automatic adjustment	✓	✓	✓
4 colours available (anthracite/white/champagne/silver)	✓	✓	✓
Analogue-digital inputs	2	4	4
Installation in European, British, Italian, American or Australian standard single back box	✓	-	-
Installation in European double or British double standard back box	-	✓	✓
Remote control (Ethernet)	Under license	Under license	Under license
Video intercom and internal calls	Under license	Under license	Under license
Voice control	Under license	Under license	Under license

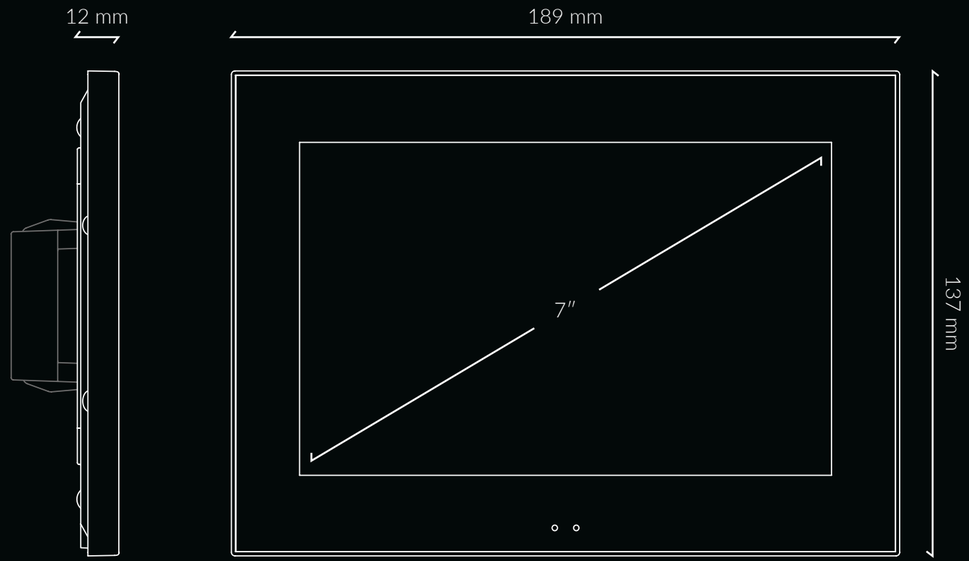

ZVIZ70V2

References and specifications

	Z50	Z70	Z100
Display size	5”	7”	10”
Controls and indicators in standard pages	96	144	180
Thermostats	2	2	2
IP camera visualization	✓	✓	✓
Screensaver	✓	✓	✓
Multilanguage	✓	✓	✓
Custom icons	✓	✓	✓
Technical alarms	✓	✓	✓
Timers	✓	✓	✓
Temperature sensor	✓	✓	-
Proximity sensor	✓	✓	✓
Luminosity sensor for brightness automatic adjustment	✓	✓	✓
4 colours available (anthracite/white/champagne/silver)	✓	✓	✓
Analogue-digital inputs	2	4	4
Installation in European, British, Italian, American or Australian standard single back box	✓	-	-
Installation in European double or British double standard back box	-	✓	✓
Remote control (Ethernet)	Under license	Under license	Under license
Video intercom and internal calls	Under license	Under license	Under license
Voice control	Under license	Under license	Under license

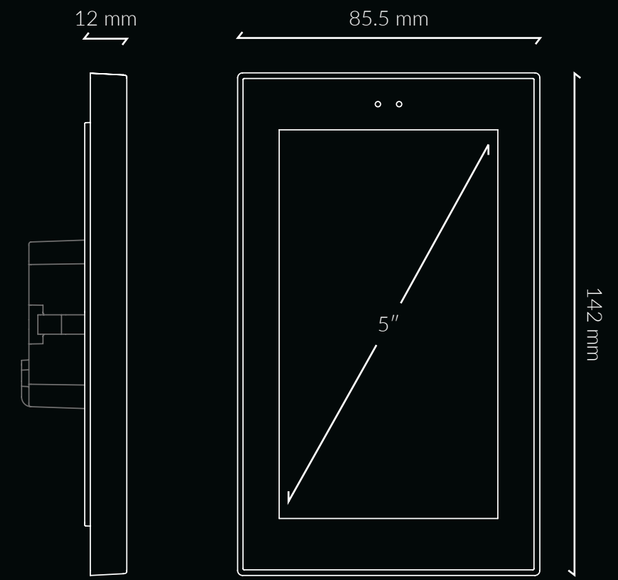

ZVIZ50

INDEX

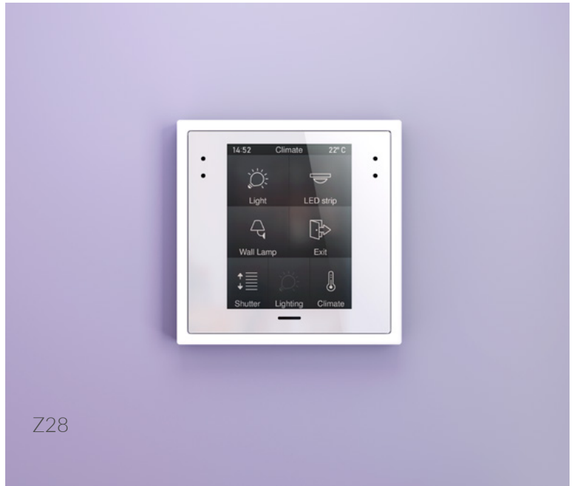

Room controllers

Z40 - Z35 - Z28

Ultra intuitive, elegant and with an extraordinary performance

Intuitive screens with the latest capacitive technology to enjoy and obtain the highest performance in any room with a modern and elegant design. Its clean lines fit perfectly into any deco and matches Zennio switches.

INDEX

Different format, same functionality

Z40

A 4.1" colour touch panel that combines with any environment, ideal to combine with Italian, American or Australian style switches.

Z35

A 3.5" square colour touch panel to match all Zennio capacitive touch switches and achieve greater functionality in any room while maintaining aesthetic cohesion.

Z28

A little great revolution.

This 2.8" colour touch panel is a huge revolution due to its installation in 70x70 frames, making it a compact, discreet and multi-functional solution.

INDEX

Much more than a thermostat...

Z28, Z35 and Z40 capacitive touch panels are much more than just thermostats. With multiple functionalities, they are conceived to make the most of your day to day. Whatever your option, you will be able to achieve a perfect ambience thanks to the multitude of actions: lighting scenes, HVAC, blinds control and even playing music from your smartphone.

Its like you've always had it

Z28, Z35 and Z40 user interfaces are extremely visual and intuitive. With clear and simple home pages, you will feel totally fine using them from the first touch.

INDEX

Enjoy a perfect dream

The displays adapt to ambience luminosity and user proximity.

Z28, Z35 and Z40 are smart touch displays that adapt to any scenario: with their proximity sensor the display is only active when approached for maximum comfort. While not in use, the screensaver can display a clock, a nice picture or just remain inactive, whatever you prefer! Moreover, it adapts to the ambience luminosity thanks to its luminosity sensor that dims the display.

INDEX

References and specifications

	Z28	Z35	Z40
Display size	2.8"	3.5"	4.1"
Controls and indicators in standard pages	35	56	56
Thermostats	2	2	2
Installation with Zennio 70x70 frames	✓	-	-
Installation with Jung LS frames	✓	-	-
Thermostat pages	✓	✓	✓
Screensaver	✓	✓	✓
Multilanguage	✓	✓	✓
Temperature sensor	-	✓	✓
Proximity sensor	✓	✓	✓
Luminosity sensor for brightness automatic adjustment	✓	✓	✓
Humidity sensor	-	✓	-
4 colours available (anthracite/white/champagne/silver)	✓	✓	✓
Analogue-digital inputs for motion sensors, temperature probe or potential-free contacts	2	4	4
Installation in European or British back box	✓	✓	✓
Installation in Italian, American or Australian back box	-	-	✓

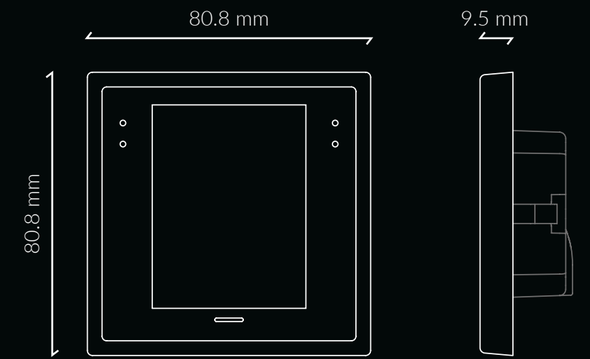

ZVIZ28

INDEX

References and specifications

	Z28	Z35	Z40
Display size	2.8"	3.5"	4.1"
Controls and indicators in standard pages	35	56	56
Thermostats	2	2	2
Installation with Zennio 70x70 frames	✓	-	-
Installation with Jung LS frames	✓	-	-
Thermostat pages	✓	✓	✓
Screensaver	✓	✓	✓
Multilanguage	✓	✓	✓
Temperature sensor	-	✓	✓
Proximity sensor	✓	✓	✓
Luminosity sensor for brightness automatic adjustment	✓	✓	✓
Humidity sensor	-	✓	-
4 colours available (anthracite/white/champagne/silver)	✓	✓	✓
Analogue-digital inputs for motion sensors, temperature probe or potential-free contacts	2	4	4
Installation in European or British back box	✓	✓	✓
Installation in Italian, American or Australian back box	-	-	✓

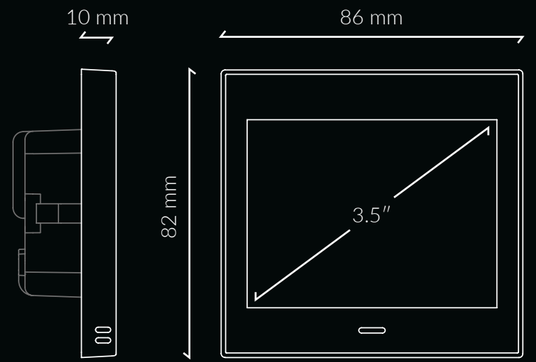

ZVIZ35V3

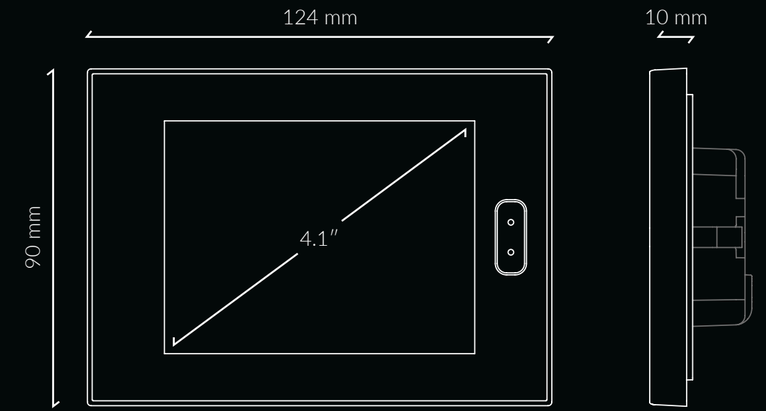

ZVIZ40

INDEX

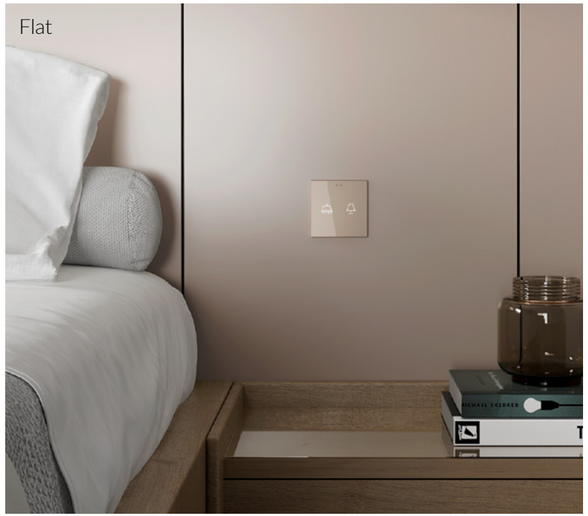

Capacitive panels

Flat 55 - Flat 70 - Flat - Flat XL
Flat Sensato - Flat AmbienT

Unique flat designs for a distributed control

Glass capacitive switches, fully customizable according to your own style so you can choose the buttons and functions that you need in each room. Do you want it with or without a display? How many buttons? From a minimalistic design to a fully personalized one, pick the one that better meets your requirements. With backlit icons according to ambience luminosity so you can enjoy a relaxing and pleasing environment.

INDEX

Infinite combinations

The perfect quality of glass and all the possibilities of personalization. Combine them however you want with the electrical accesories family, all flush fitted into 55x55 frames.

Flat 55

1, 2 or 4 buttons with backlit icons in a compact format for lighting, blinds or any other functionality.

Flat 55 Display

A unique design with a circular display.
An elegant and discreet thermostat for an increased room comfort.

INDEX

The family is growing with a new addition: Flat 70

It is specially designed to be installed in 70x70 mm frames, making it compatible with the LS990 series frames from Jung and, of course, Zennio's frames.

You can personalize the glass and the icons, and choose between 1, 2, 4 or 6 buttons.

INDEX

Your bespoke switch

Flat

Choose the number of buttons, 1, 2, 4 or 6, choose the backlit icons for each function according to your requirements and make it bespoke to control whatever you want in a quick and direct way.

Flat Display

A 2.4" display to show the status of the space where its placed plus 5 buttons to make it the perfect thermostat.

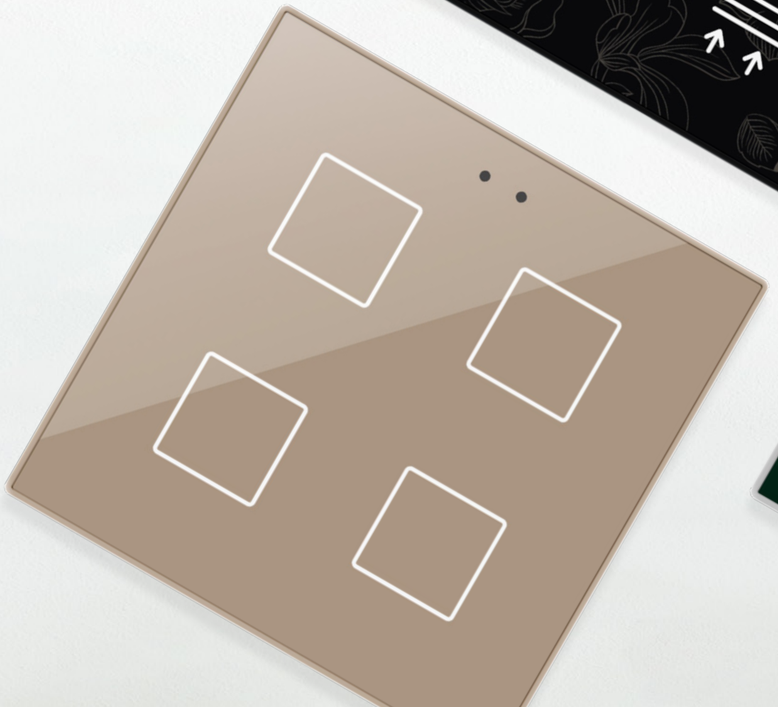

INDEX

Flat XL

All the Flat family capabilities in a switch with greater possibilities: 4, 6, 8 or up to 10 buttons with backlit icons. It fits Italian, American or Australian styles... but over all it fits your own personal style.

INDEX

Infinite options, unique results

Pick between the minimalistic standard designs or make your own bespoke design with the glass finish and backlit icons elegance and quality.

INDEX

Complete the family while maintaining aesthetics

Aesthetic cohesion is key for room harmony. The Flat family is completed with two devices that maintain the family looks adding unique value.

Flat Sensato

An environment with humidity control allows an optimal air quality, increasing comfort for those who want to control and improve every aspect of their lives.

Flat AmbienT

For those rooms where only temperature reading is required while keeping the characteristic elegance of the Flat family.

INDEX

References and specifications

	Flat 55	Flat 55 Display	Flat 70
Backlit icons	✓	✓	✓
Luminosity sensor for brightness automatic adjustment	✓	✓	✓
Proximity sensor	✓	✓	✓
Thermostat	✓	✓	✓
In-built temperature sensor	-	-	✓
Installation in European standard mounting box	✓	✓	✓
Installation in Italian, American or Australian standard mounting box	-	-	-
Combination with 55x55 series switches and sockets	✓	✓	-
Combination with 70x70 series switches and sockets	-	-	✓
Housing available in 4 colours (anthracite/white/champagne/silver)	✓	✓	✓
Customizable	✓	✓	✓
Number of buttons	1/2/4	4	1/2/4/6
Backlit display	-	✓	-
2 analogue-digital inputs	✓	✓	✓
Vertical or horizontal installation	✓	-	✓

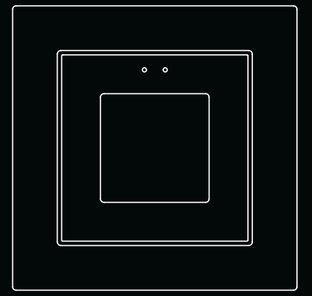

ZVIF55X1V2

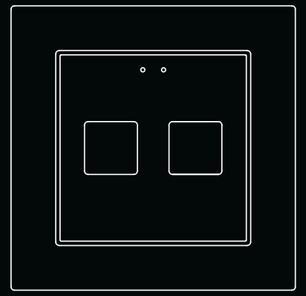

ZVIF55X2V2

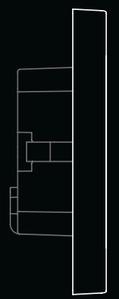

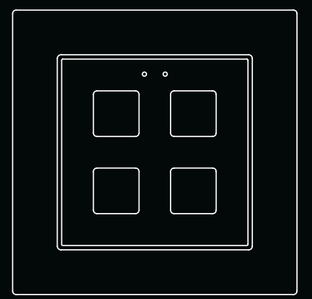

ZVIF55X4V2

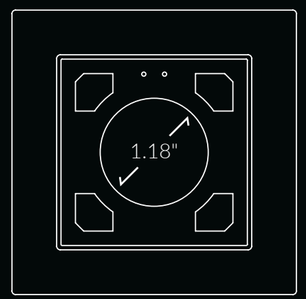

ZVIF55DV2

INDEX

References and specifications

	Flat 55	Flat 55 Display	Flat 70
Backlit icons	✓	✓	✓
Luminosity sensor for brightness automatic adjustment	✓	✓	✓
Proximity sensor	✓	✓	✓
Thermostat	✓	✓	✓
In-built temperature sensor	-	-	✓
Installation in European standard mounting box	✓	✓	✓
Installation in Italian, American or Australian standard mounting box	-	-	-
Combination with 55x55 series switches and sockets	✓	✓	-
Combination with 70x70 series switches and sockets	-	-	✓
Housing available in 4 colours (anthracite/white/champagne/silver)	✓	✓	✓
Customizable	✓	✓	✓
Number of buttons	1/2/4	4	1/2/4/6
Backlit display	-	✓	-
2 analogue-digital inputs	✓	✓	✓
Vertical or horizontal installation	✓	-	✓

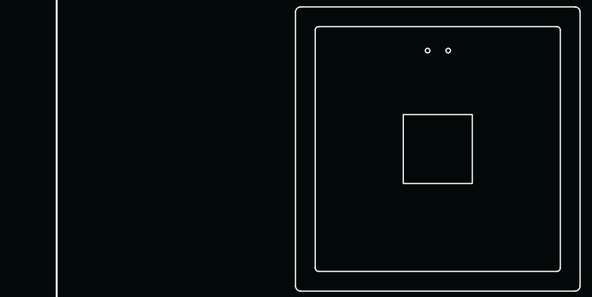

ZVIF70X1

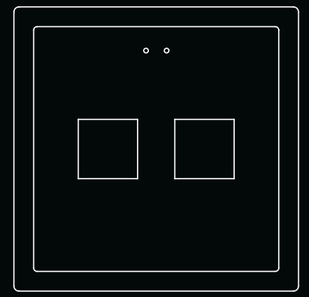

ZVIF70X2

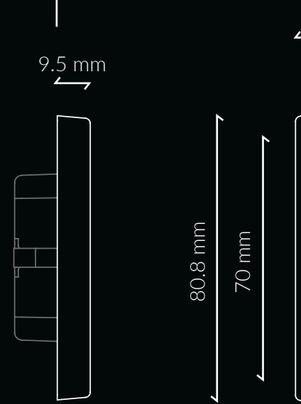

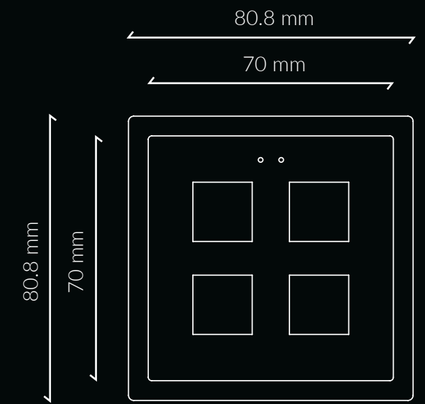

ZVIF70X4

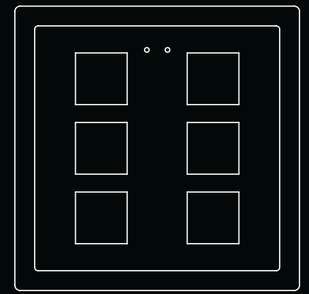

ZVIF70X6

INDEX

References and specifications

	Flat	Flat Display	Flat XL
Backlit icons	✓	✓	✓
Luminosity sensor for brightness automatic adjustment	✓	✓	✓
Proximity sensor	✓	✓	✓
Humidity sensor	-	✓	-
Thermostat	✓	✓	✓
In-built temperature sensor	✓	✓	✓
Installation in European or British standard mounting box	✓	✓	✓
Installation in Italian, American or Australian standard mounting box	-	-	✓
Combination with 55x55 series switches and sockets	-	-	-
Housing available in 4 colours (anthracite/white/champagne/silver)	✓	✓	✓
Customizable	✓	✓	✓
Number of buttons	1/2/4/6	5	4/6/8/10
Backlit display	-	✓	-
2 analogue-digital inputs	✓	✓	✓
Vertical or horizontal installation	✓	-	✓

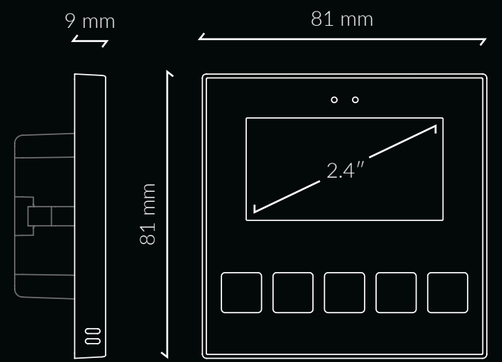

ZVIFDV2

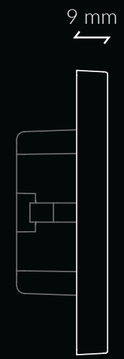

ZVIF1V2

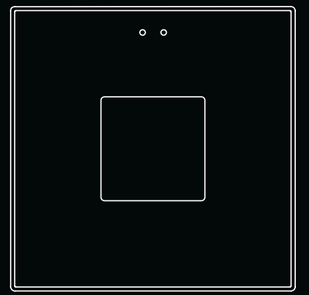

ZVIF2V2

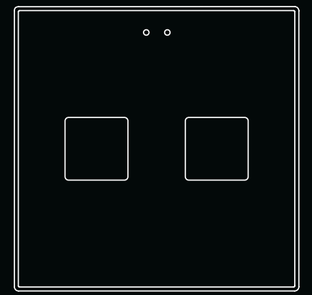

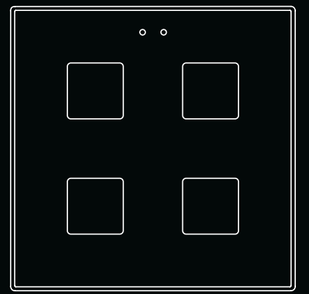

ZVIF4V2

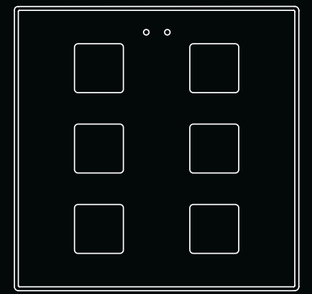

ZVIF6V2

INDEX

References and specifications

	Flat	Flat Display	Flat XL
Backlit icons	✓	✓	✓
Luminosity sensor for brightness automatic adjustment	✓	✓	✓
Proximity sensor	✓	✓	✓
Humidity sensor	-	✓	-
Thermostat	✓	✓	✓
In-built temperature sensor	✓	✓	✓
Installation in European or British standard mounting box	✓	✓	✓
Installation in Italian, American or Australian standard mounting box	-	-	✓
Combination with 55x55 series switches and sockets	-	-	-
Housing available in 4 colours (anthracite/white/champagne/silver)	✓	✓	✓
Customizable	✓	✓	✓
Number of buttons	1/2/4/6	5	4/6/8/10
Backlit display	-	✓	-
2 analogue-digital inputs	✓	✓	✓
Vertical or horizontal installation	✓	-	✓

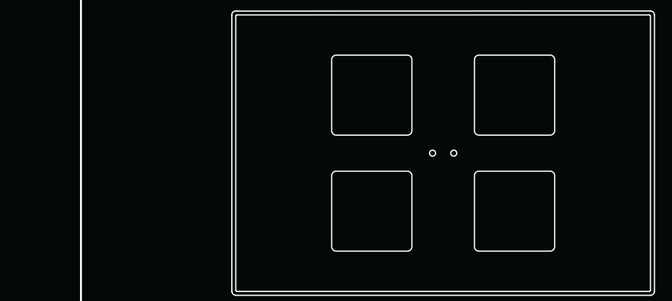

ZVIFXLX4

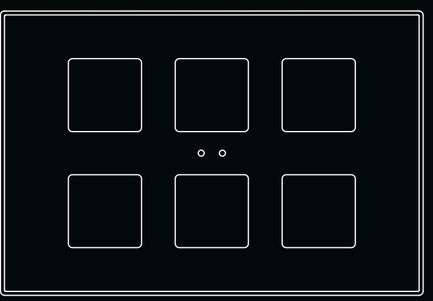

ZVIFXLX6

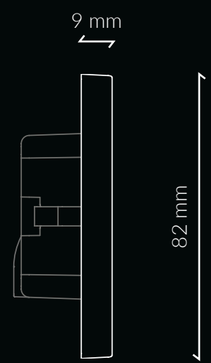

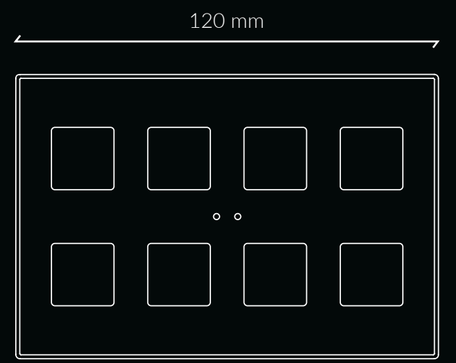

ZVIFXLX8

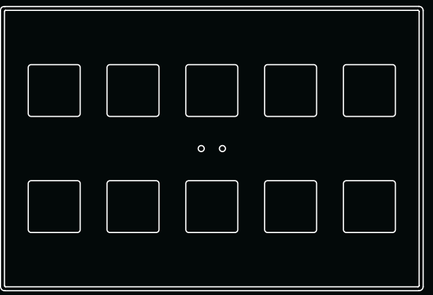

ZVIFXLX10

INDEX

References and specifications

	Flat Sensato	Flat AmbienT
Humidity sensor	✓	-
In-built temperature sensor	✓	✓
Installation in European or British standard mounting box	✓	✓
Installation in Italian, American or Australian standard mounting box	-	-
Combination with 55x55 series switches and sockets	-	-
Customizable	-	-
Housing available in 4 colours (anthracite/white/champagne/silver)	✓	✓
2 analogue-digital inputs	✓	-
Vertical or horizontal installation	-	-
KNX bus connection	✓	-

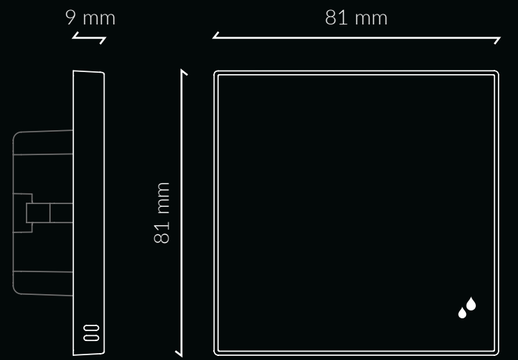

ZSFSENV2

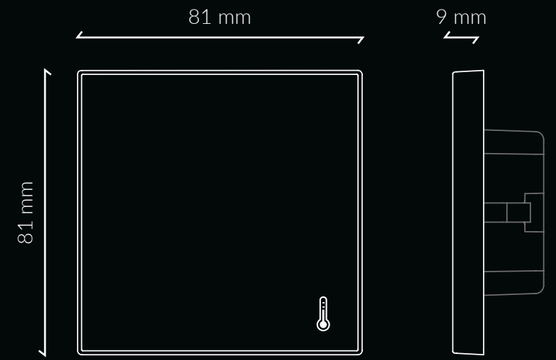

ZACFAT

INDEX

Tecla

Tecla 55

Tecla 70

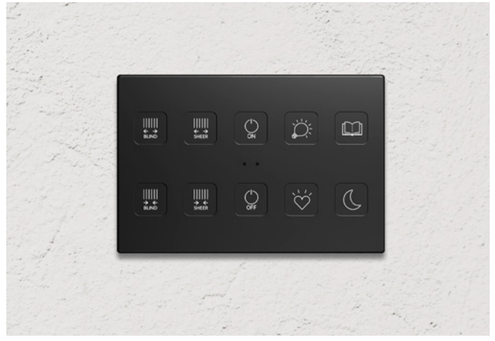

Tecla XL

Capacitive touch switches

Tecla 55 - Tecla 70 - Tecla - Tecla XL

The most versatile control with the most minimalistic design

Enjoy distributed control with the Tecla family to meet all your requirements. Its polycarbonate simplified aesthetics with a complete range of backlit icons allows for a one of a kind user experience.

Tecla brings simplicity to another level offering a discreet integration into any environment.

INDEX

Tecla

Experience the elegance and versatility of the 1, 2, 4, 6 and 8-button touch switches with fully customizable back-lit icons.

Be Smart, be intuitive.

The perfect option to simplify your life in style.

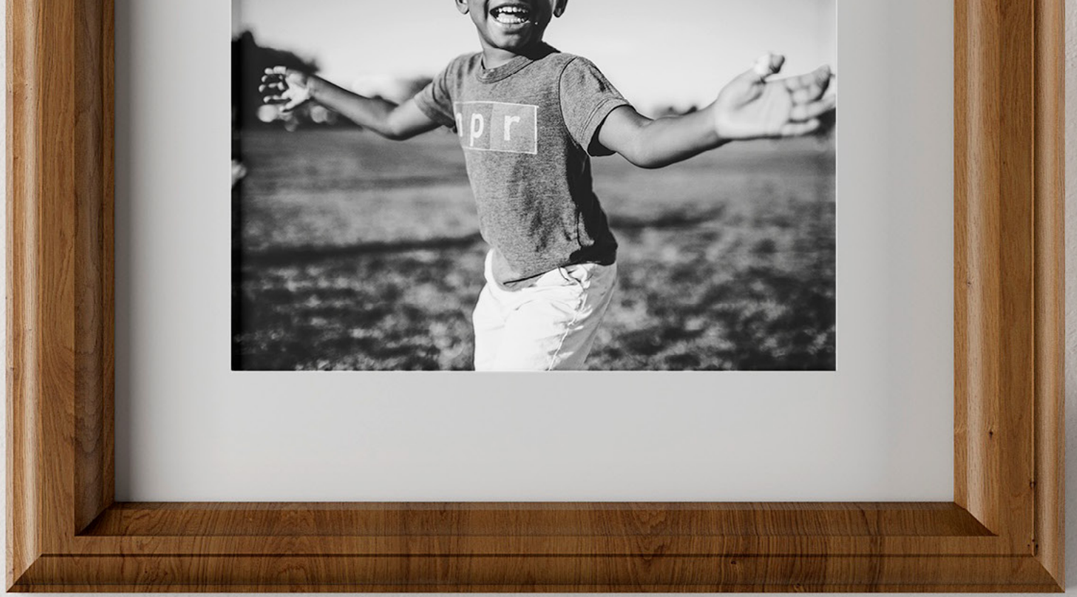

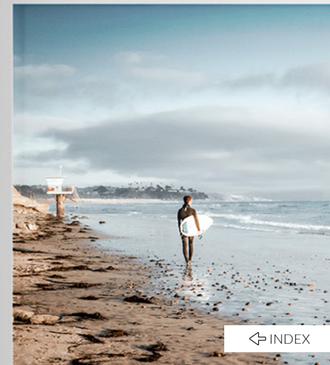

INDEX

Tecla 55

1, 2, 4 and 6-button touch switches to replace conventional switches and increase control options while reducing the required space. A perfect combination and integration with 55x55 flush-fitted sockets and accessories.

55x55 socket outlet with Tecla 55, double USB charger and euro-american flush-mounted on SHA Wellness Clinic Mexico.

INDEX

Tecla XL

4, 6, 8 and 10-button touch switches in rectangular format with a minimalistic design to meet every décor.

INDEX

Bespoke functionality

A full range of backlit icons to show the different functions each button controls.

Buttons become brighter when approached to show every available control option and dim when you move away.

The simplicity of standard

Minimalistic, sofisticated and timeless. Standard options fit every environment. Neutral designs that integrate perfectly into any space.

INDEX

Tecla 55 X2 Sign

A room signalling and status selection device that allows to show guest preferences for making up the room or privacy in an intuitive, simple and elegant way.

When located outside the room it will let the hotel staff know the DND/MUR status selected by the guest as well as if the guest is currently inside the room.

INDEX

Tecla 70

Compatible with the LS990 series frames by Jung and with the ZS70 frames by Zennio.

Discreet, customisable, and flush-fitting with the rest of the 70x70 switches and sockets to create the atmosphere you are looking for.

INDEX

References and specifications

	Tecla	Tecla 55	Tecla XL	Tecla 70
Customizable backlit icons	✓	✓	✓	✓
Luminosity sensor for brightness automatic adjustment	✓	✓	✓	✓
Proximity sensor	✓	✓	✓	✓
Thermostat	✓	✓	✓	✓
Temperature sensor	In-built	Input for sensor	In-built	In-built
Installation in European standard mounting box	✓	✓	✓	✓
Installation in Italian, American or Australian standard mounting box	-	-	✓	-
Combination with 55x55 series switches and sockets	-	✓	-	-
Combination with 70x70 series switches and sockets				✓
4 colours available (anthracite/white/champagne/silver)	✓	✓	✓	✓
Number of buttons	1/2/4/6/8	1/2/4/6	4/6/8/10	1/2/4/6
Analogue-digital inputs	2	1 for temperature probe	-	2
Vertical or horizontal installation	✓	✓	✓	✓

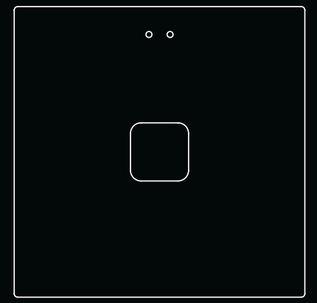

ZVIT1

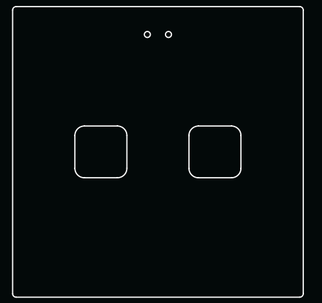

ZVIT2

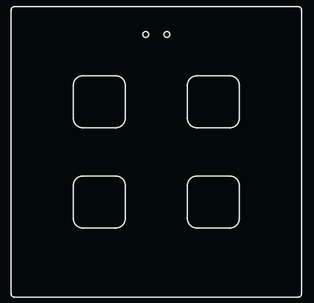

ZVIT4

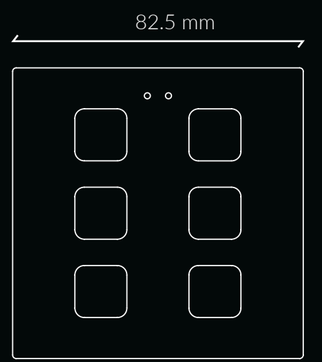

ZVIT6

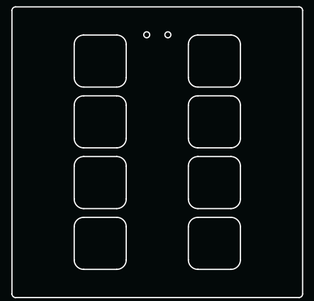

ZVIT8

INDEX

References and specifications

	Tecla	Tecla 55	Tecla XL	Tecla 70
Customizable backlit icons	✓	✓	✓	✓
Luminosity sensor for brightness automatic adjustment	✓	✓	✓	✓
Proximity sensor	✓	✓	✓	✓
Thermostat	✓	✓	✓	✓
Temperature sensor	In-built	Input for sensor	In-built	In-built
Installation in European standard mounting box	✓	✓	✓	✓
Installation in Italian, American or Australian standard mounting box	-	-	✓	-
Combination with 55x55 series switches and sockets	-	✓	-	-
Combination with 70x70 series switches and sockets				✓
4 colours available (anthracite/white/champagne/silver)	✓	✓	✓	✓
Number of buttons	1/2/4/6/8	1/2/4/6	4/6/8/10	1/2/4/6
Analogue-digital inputs	2	1 for temperature probe	-	2
Vertical or horizontal installation	✓	✓	✓	✓

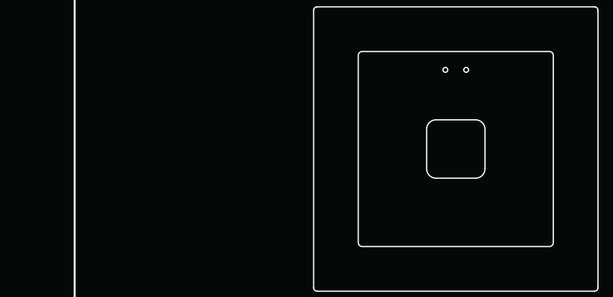

ZVIT55X1

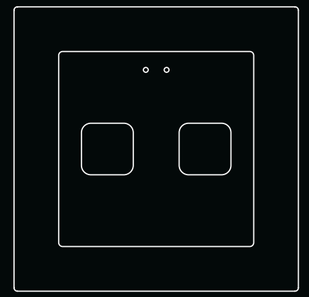

ZVIT55X2

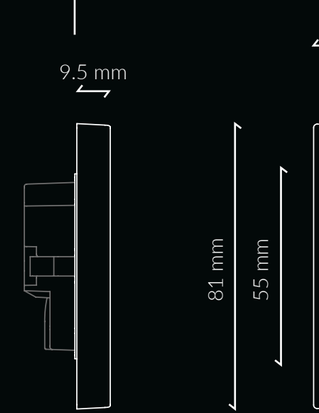

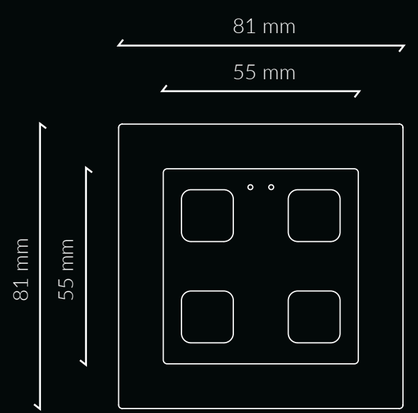

ZVIT55X4

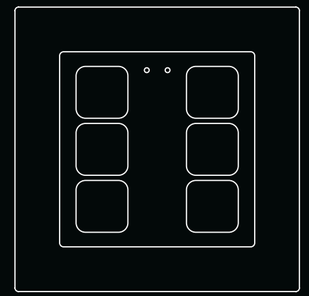

ZVIT55X6

INDEX

References and specifications

	Tecla	Tecla 55	Tecla XL	Tecla 70
Customizable backlit icons	✓	✓	✓	✓
Luminosity sensor for brightness automatic adjustment	✓	✓	✓	✓
Proximity sensor	✓	✓	✓	✓
Thermostat	✓	✓	✓	✓
Temperature sensor	In-built	Input for sensor	In-built	In-built
Installation in European standard mounting box	✓	✓	✓	✓
Installation in Italian, American or Australian standard mounting box	-	-	✓	-
Combination with 55x55 series switches and sockets	-	✓	-	-
Combination with 70x70 series switches and sockets				✓
4 colours available (anthracite/white/champagne/silver)	✓	✓	✓	✓
Number of buttons	1/2/4/6/8	1/2/4/6	4/6/8/10	1/2/4/6
Analogue-digital inputs	2	1 for temperature probe	-	2
Vertical or horizontal installation	✓	✓	✓	✓

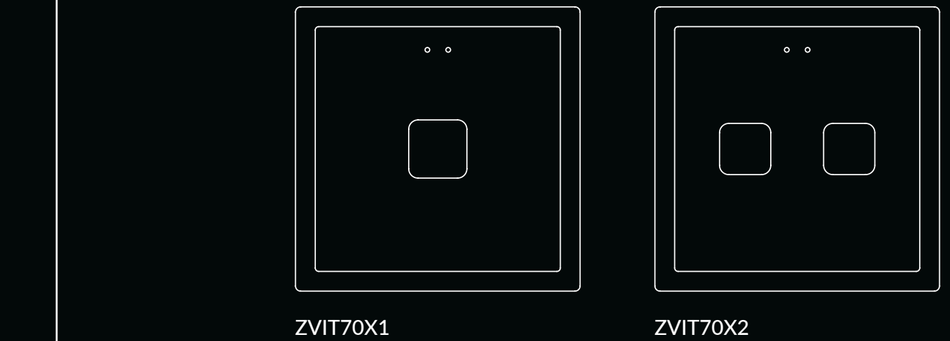

ZVIT70X1

ZVIT70X2

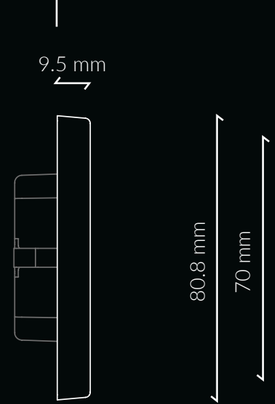

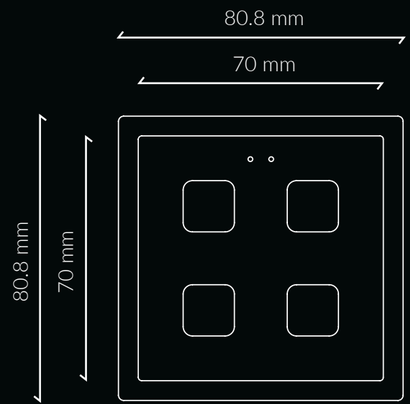

ZVIT70X4

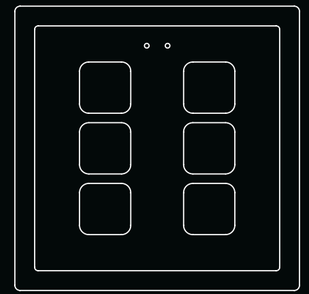

ZVIT70X6

INDEX

References and specifications

	Tecla	Tecla 55	Tecla XL	Tecla 70
Customizable backlit icons	✓	✓	✓	✓
Luminosity sensor for brightness automatic adjustment	✓	✓	✓	✓
Proximity sensor	✓	✓	✓	✓
Thermostat	✓	✓	✓	✓
Temperature sensor	In-built	Input for sensor	In-built	In-built
Installation in European standard mounting box	✓	✓	✓	✓
Installation in Italian, American or Australian standard mounting box	-	-	✓	-
Combination with 55x55 series switches and sockets	-	✓	-	-
Combination with 70x70 series switches and sockets				✓
4 colours available (anthracite/white/champagne/silver)	✓	✓	✓	✓
Number of buttons	1/2/4/6/8	1/2/4/6	4/6/8/10	1/2/4/6
Analogue-digital inputs	2	1 for temperature probe	-	2
Vertical or horizontal installation	✓	✓	✓	✓

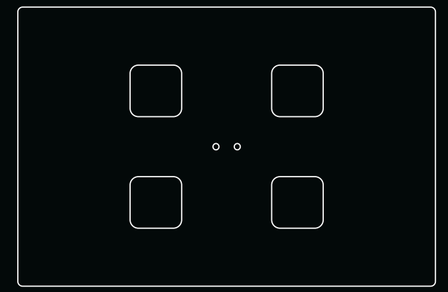

ZVITXLX4

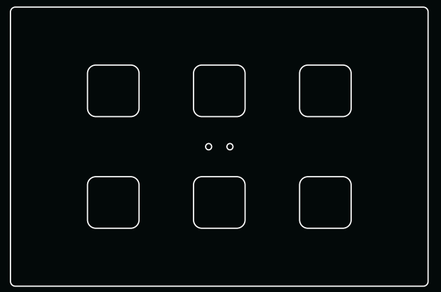

ZVITXLX6

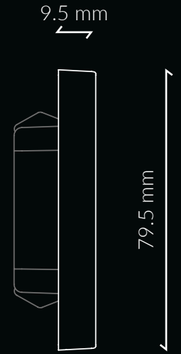

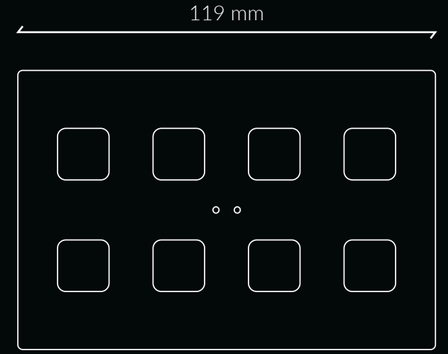

ZVITXLX8

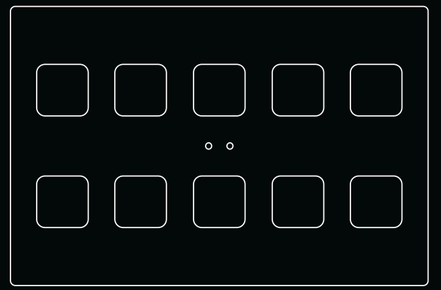

ZVITXLX10

INDEX

A step towards
ambient intelligence

Wall-mounted motion detector

Presentia W

Run any desired function with just moving thanks to the 180º wall-mounted motion detector. Combine it with switches and electrical accessories and it will be discreetly integrated in any ambience.

INDEX

Guaranteed discretion

An elegant option for rooms or corridors thanks to its seamless integration with the Tecla 55 and Flat 55 families as well as the ZS55 electrical accessories range.

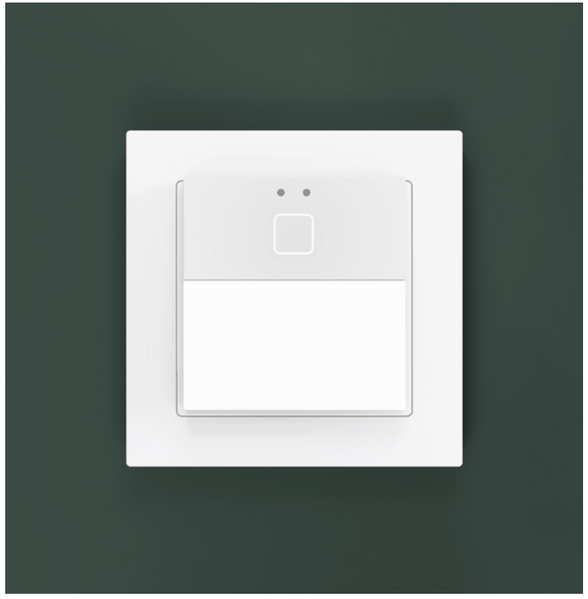

Much more than a motion detector

Control any function with the additional backlit buttons in Presentia W1 and Presentia W2 models.

Choose between personalized or standard icons according to your control requirements.

INDEX

References and specifications

	Presentia W0	Presentia W1	Presentia W2
Maximum detection length	10 m	10 m	10 m
Detection area	180°	180°	180°
Number of buttons	-	1	2
Customizable backlit icons	-	✓	✓
Luminosity sensor for brightness automatic adjustment	✓	✓	✓
Proximity sensor	✓	✓	✓
Installation in European standard mounting box	✓	✓	✓
Installation in Italian, American or Australian standard mounting box	-	-	-
Combination with 55x55 series switches and sockets	✓	✓	✓
4 colours available (anthracite/white/champagne/silver)	✓	✓	✓

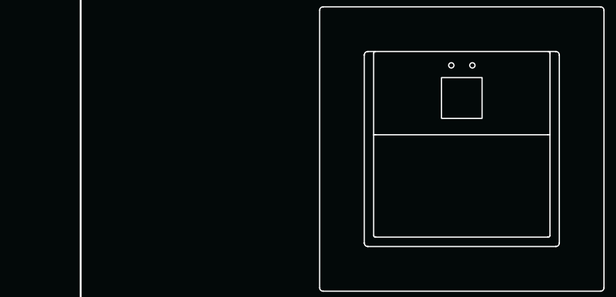

ZPDW1V2

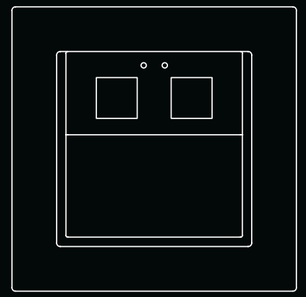

ZPDW2V2

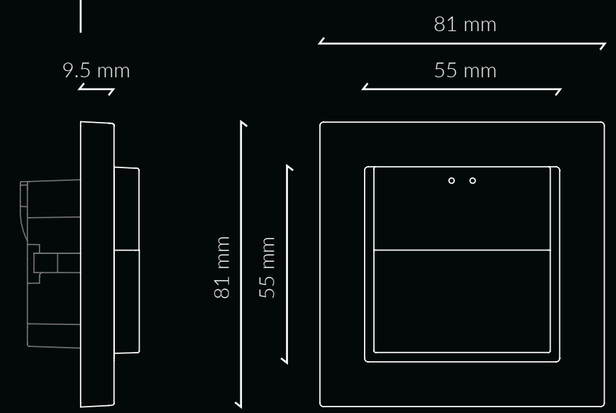

ZPDW0V2

INDEX

Switches and sockets

ZS55

Complete your smart home installation with the electrical accessories that better combine with the touch panels, displays and touch switches. With timeless designs and flush-fitted into the frames. Combine them as you wish.

INDEX

Sockets

Schuko

French

Euro-American

Sockets with USB

INDEX

Simple Soft switch

Conventional-looking, soft-touch pushbuttons. They simplify your installation by directly connecting to binary inputs.

Double Soft switch

INDEX

USB Charger

Double USB charger

Data outlets

Single RJ45

Double RJ45

INDEX

Multimedia outlets

3.5 mm Jack and RCA

TV-R Aerial

Accessories

Blind cover and cable outlet

1, 2, 3 and 4-module frames

Frames

INDEX

References and specifications

	Schuko
Schuko socket insert 16 A / 250 V ~ - screw terminals (without cover 8300004xx)	8300003
Schuko socket cover 55x55 mm - Anthracite	830000405
Schuko socket cover 55x55 mm - Silver	830000406
Schuko socket cover 55x55 mm - Matt white	830000409
Schuko socket cover 55x55 mm - Champagne	830000404

	Schuko with USB C
Schuko socket insert 16 A / 250 V ~ with USB C - quick connection (without cover ZS55CSC1USx)	ZSISC1US
Schuko socket cover with USB C 55x55 mm - Anthracite	ZS55CSC1USA
Schuko socket cover with USB C 55x55 mm - Silver	ZS55CSC1USS
Schuko socket cover with USB C 55x55 mm - Matt white	ZS55CSC1USMW
Schuko socket cover with USB C 55x55 mm - Champagne	ZS55CSC1USC

	Schuko with USB C+A
Schuko socket insert 16 A / 250 V ~ with USB C and A - quick-connect terminals (without cover ZS55CSC2USx)	ZSISC2US
Schuko socket cover with USB C and A 55x55 mm - Anthracite	ZS55CSC2USA
Schuko socket cover with USB C and A 55x55 mm - Silver	ZS55CSC2USS
Schuko socket cover with USB C and A 55x55 mm - Matt white	ZS55CSC2USMW
Schuko socket cover with USB C and A 55x55 mm - Champagne	ZS55CSC2USC

	Schuko	Schuko with USB C	Schuko with USB C+A
4 colours available (anthracite/matt white/champagne/silver)	✓	✓	✓
Socket type	F, C	F, C	F, C
Rated current / voltage	16 A / 250 V ~	16 A / 250V ~	16 A / 250V ~
Maximum cable cross-section	2.5 mm^2	2.5 mm^2	2.5 mm^2
Connection method	Screw terminal block	Quick-connect terminals	Quick-connect terminals
Fixing mechanism	With screws. Optional claws	With screws. Optional claws	With screws. Optional claws
Child safety shutter	✓	✓	✓
USB type	-	C	A + C
USB charging current	-	2.4 A - 5 V (12 W) / 1.67 A - 9 V (15 W)	2.4 A - 5 V (12 W)
Fast Charging	-	✓	-
Norm	IEC 60884-1	IEC 60884-3-1	IEC 60884-3-1

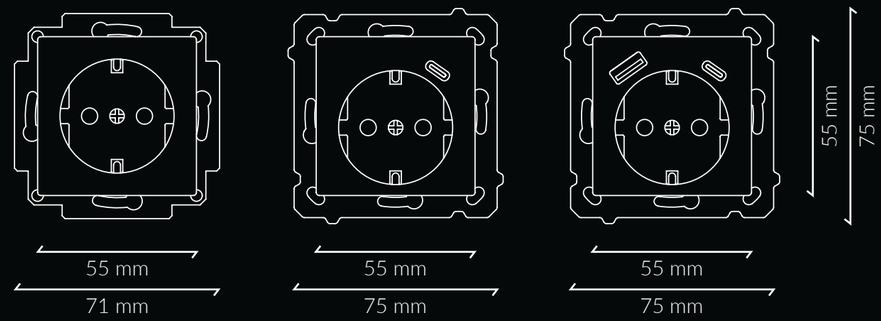

INDEX

References and specifications

	French
French socket insert 16 A / 250 V ~ - screw terminals (without cover 8300006xx)	8300005
French socket cover 55x55 mm - Anthracite	830000605
French socket cover 55x55 mm - Silver	830000606
French socket cover 55x55 mm - Matt white	830000609
French socket cover 55x55 mm - Champagne	830000604

	French with USB C
French socket insert 16 A / 250 V ~ with USB C - quick connection (without cover ZS55CF1USx)	ZSIF1US
French socket cover with USB C 55x55 mm - Anthracite	ZS55CF1USA
French socket cover with USB C 55x55 mm - Silver	ZS55CF1USS
French socket cover with USB C 55x55 mm - Matt white	ZS55CF1USMW
French socket cover with USB C 55x55 mm - Champagne	ZS55CF1USC

	French with USB C + A
French socket insert 16 A / 250 V ~ with USB C and A - quick-connect terminals (without cover ZS55CF2USx)	ZSIF2US
French socket cover with USB C and A 55x55 mm - Anthracite	ZS55CF2USA
French socket cover with USB C and A 55x55 mm - Silver	ZS55CF2USS
French socket cover with USB C and A 55x55 mm - Matt white	ZS55CF2USMW
French socket cover with USB C and A 55x55 mm - Champagne	ZS55CF2USC

	French	French with USB C	French with USB C + A
4 colours available (anthracite/matt white/champagne/silver)	✓	✓	✓
Socket type	E, C	E, C	E, C
Rated current / voltage	16 A / 250 V ~	16 A / 250 V ~	16 A / 250 V ~
Maximum cable cross-section	2.5 mm^2	2.5 mm^2	2.5 mm^2
Connection method	Screw terminal block	Quick-connect terminals	Quick-connect terminals
Fixing mechanism	With screws. Optional claws	With screws. Optional claws	With screws. Optional claws
Child safety shutter	✓	✓	✓
USB type	-	C	A + C
USB charging current	-	2.4 A - 5 V (12 W) / 1.67 A - 9 V (15 W)	2.4 A - 5 V (12 W)
Fast Charging	-	✓	-
Norm	IEC 60884-1	IEC 60884-3-1	IEC 60884-3-1

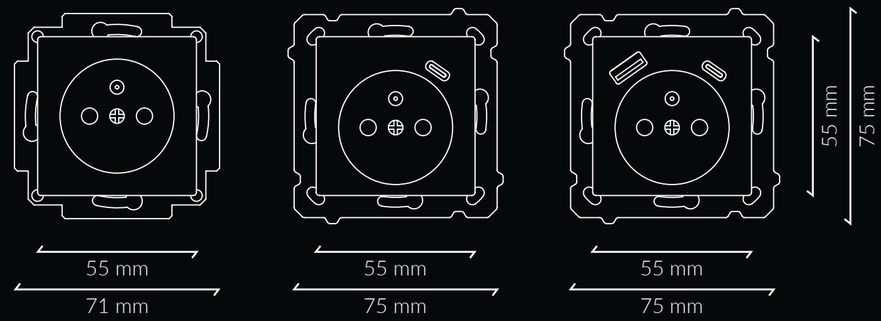

INDEX

References and specifications

	Euro-American
Euro-American socket insert - screw terminals (without cover ZS55CEUAx)	ZS55IEUAS
Euro-American socket cover 55x55 mm - Anthracite	ZS55CEUAA
Euro-American socket cover 55x55 mm - Silver	ZS55CEUAS
Euro-American socket cover 55x55 mm - Matt white	ZS55CEUAW
Euro-American socket cover 55x55 mm - Champagne	ZS55CEUAC

	Euro-American with USB C
Euro-American socket insert with USB C - screw terminals (without cover ZS55CEAU1USx)	ZS55IEUA1US
Euro-American socket cover with USB C 55x55 mm - Anthracite	ZS55CEUA1USA
Euro-American socket cover with USB C 55x55 mm - Silver	ZS55CEUA1USS
Euro-American socket cover with USB C 55x55 mm - Matt white	ZS55CEUA1USW
Euro-American socket cover with USB C 55x55 mm - Champagne	ZS55CEUA1USC

	Euro-American with USB C+A
Euro-American socket insert with USB C and A - screw terminals (without cover ZS55CEAU2USx)	ZS55IEUA2US
Euro-American socket cover with USB C and A 55x55 mm - Anthracite	ZS55CEUA2USA
Euro-American socket cover with USB C and A 55x55 mm - Silver	ZS55CEUA2USS
Euro-American socket cover with USB C and A 55x55 mm - Matt white	ZS55CEUA2USW
Euro-American socket cover with USB C and A 55x55 mm - Champagne	ZS55CEUA2USC

	Euro-American	Euro-American with USB C	Euro-American with USB C+A
4 colours available (anthracite/matt white/champagne/silver)	✓	✓	✓
Socket type	C, F (European) A, B (American)	C, F (European) A, B (American)	C, F (European) A, B (American)
Rated current / voltage	16 A / 110 – 250V ~	16 A / 110 – 250V ~	16 A / 110 – 250V ~
Maximum cable cross-section	2.5 mm^2	2.5 mm^2	2.5 mm^2
Connection method	Screw terminal block	Screw terminal block	Screw terminal block
Fixing mechanism	With screws. Optional claws	With screws. Optional claws	With screws. Optional claws
Child safety shutter	✓	✓	✓
USB type	-	C	A + C
USB charging current	-	2.4 A - 5 V (12 W) / 1.67 A - 9 V (15 W)	2.4 A - 5 V (12 W)
Fast Charging	-	✓	-

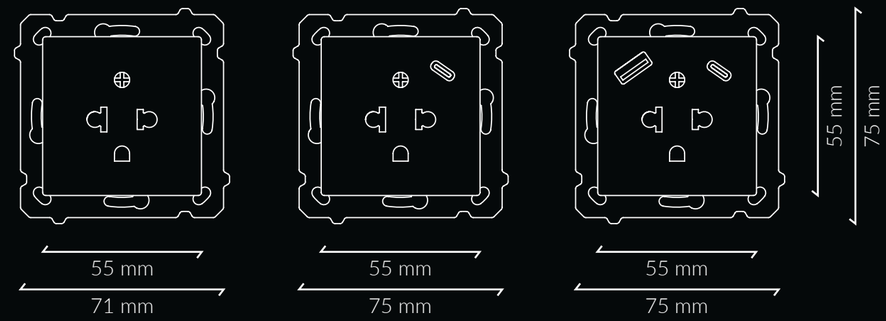

INDEX

References and specifications

	Simple Soft switch	Double Soft switch
Press	Bottom or top/bottom	Bottom or top/bottom
Customizable	✓	✓
Combinable with 55x55 frames	✓	✓
4 colours available (anthracite/white/champagne/silver)	✓	✓
Accesory for inputs	✓	✓
Conventional grid electricity	-	-
Cable cross-section	0.5-2.5 mm^2	0.5-2.5 mm^2
Connection method	Screw terminal block	Screw terminal block
Degree of protection	IP20	IP20

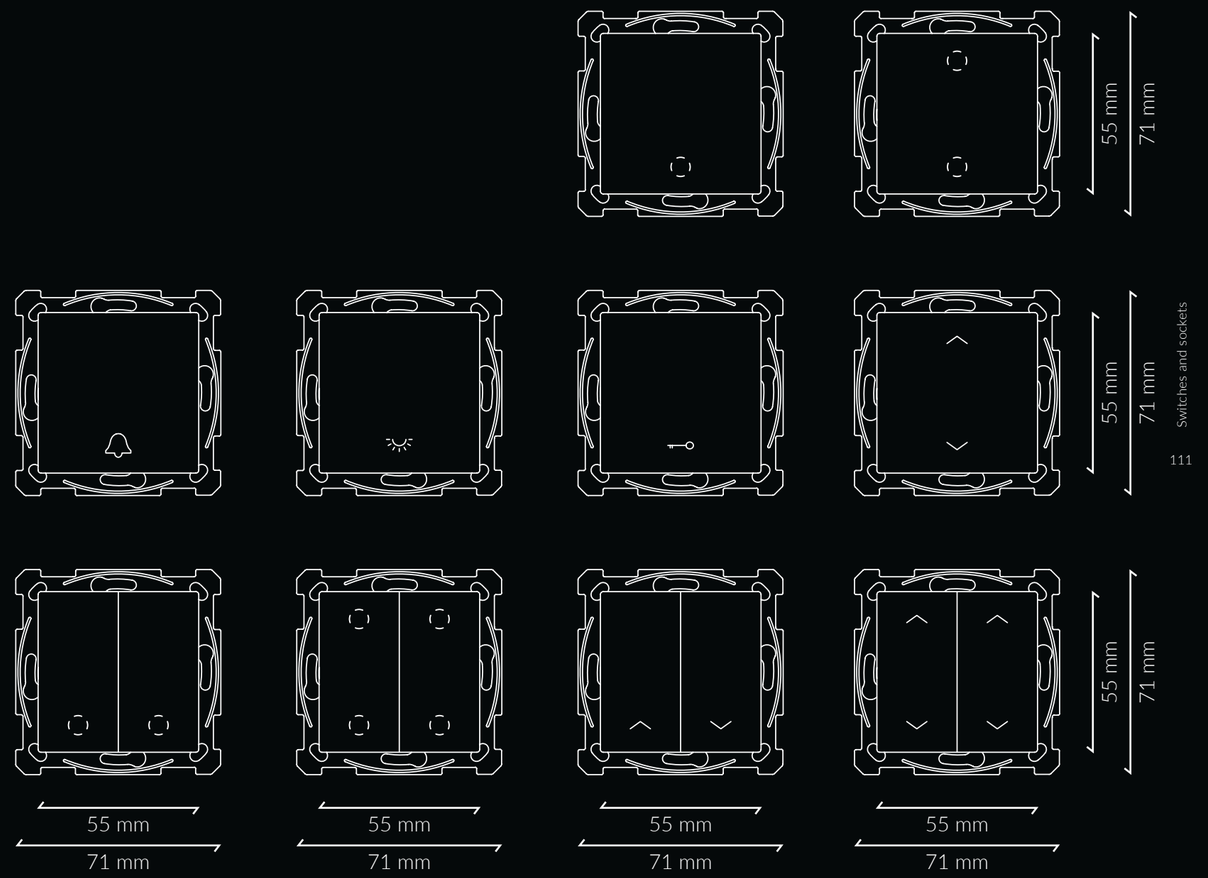

INDEX

References and specifications

	USB C+A charger
Double USB charger insert (C+A) - 5 V / 3,5 A (without cover ZS55C2UCAx)	ZSI2UCA
Cover plate for double USB C+A charger 55x55 mm - Anthracite	ZS55C2UCAA
Cover plate for double USB C+A charger 55x55 mm - Silver	ZS55C2UCAS
Cover plate for double USB C+A charger 55x55 mm - Matt white	ZS55C2UCAMW
Cover plate for double USB C+A charger 55x55 mm - Champagne	ZS55C2UCAC

	USB C+A charger
4 colours available (anthracite/matt white/champagne/silver)	✓
Input voltage	100 - 240 V ~
Output voltage	5 V DC
Output current	3.5 A (max)
Standby consumption	< 0.05 W
Connection method	Screw terminal block
Fixing mechanism	With screws. Optional claws
USB type	C+A
Fast Charging	-

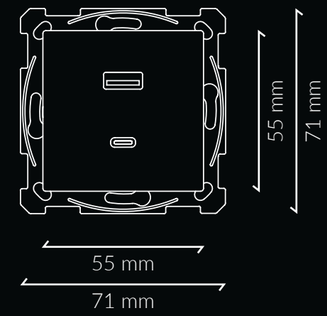

INDEX

References and specifications

Single and double RJ45 outlet

RJ45 connector – 1 insert (without keystone and cover 8300012xx)	8300009
RJ45 connector – 2 inserts (without keystone and cover 8300013xx)	8300037
RJ45 Cat. 5e connector - keystone	8300046
RJ45 Cat. 6A connector - keystone	8300047
Cover plate for RJ45 connector 55x55 mm - 1 insert - Anthracite	830001205
Cover plate for RJ45 connector 55x55 mm - 1 insert - Silver	830001206
Cover plate for RJ45 connector 55x55 mm - 1 insert - Matt white	830001209
Cover plate for RJ45 connector 55x55 mm - 1 insert - Champagne	830001204
Cover plate for RJ45 connector 55x55 mm - 2 inserts - Anthracite	830001305
Cover plate for RJ45 connector 55x55 mm - 2 inserts - Silver	830001306
Cover plate for RJ45 connector 55x55 mm - 2 inserts - Matt white	830001309
Cover plate for RJ45 connector 55x55 mm - 2 inserts - Champagne	830001304

	RJ45 Single	RJ45 Double
4 colours available (anthracite/matt white/champagne/silver)	✓	✓
Connection method	Crimped	Crimped
Fixing mechanism	With screws. Optional claws	With screws. Optional claws
Internal connection fixing	Keystone	Keystone
Norms	EN55022, EN55024, IEC61000-4-5	EN55022, EN55024, IEC61000-4-5

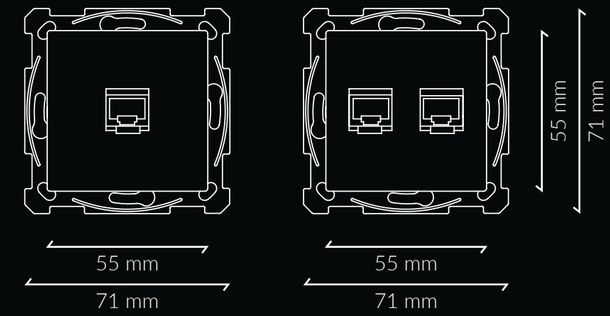

INDEX

References and specifications

	TV-R/AERIAL
TV-R - Intermediate insert (without cover 8300015xx)	8300014
TV-R - End-of-line insert (without cover 8300015xx)	8300040
TV-R/SAT – End-of-line insert (without cover 8300015xx)	8300048
Cover plate for TV/R insert 55x55 mm - Anthracite	830001505
Cover plate for TV/R insert 55x55 mm - Silver	830001506
Cover plate for TV/R insert 55x55 mm - Matt white	830001509
Cover plate for TV/R insert 55x55 mm - Champagne	830001504

	TV-R
4 colours available (anthracite/matt white/champagne/silver)	✓
Diameter	12.5 mm
Frequency range	5-2400 MHz
Connection method	Screw
Fixing mechanism	With screws or clamps (included)
Norms	EN60728-11, EN50083-2 + A1, EN50581

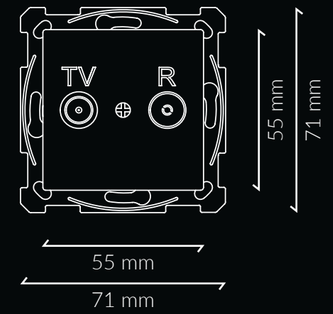

INDEX

References and specifications

	Jack 3.5 mm
HDMI or Jack 3.5 mm insert support (without keystone and cover 8300025xx/8300027xx)	8300024
Jack 3.5 mm audio keystone	8300050
Cover for jack 3.5 mm insert 55x55 mm - Anthacite	830002705
Cover for jack 3.5 mm insert 55x55 mm - Silver	830002706
Cover for jack 3.5 mm insert 55x55 mm - Matt white	830002709
Cover for jack 3.5 mm insert 55x55 mm - Champagne	830002704

	RCA
RCA audio insert (without keystones and cover 8300023xx)	8300022
RCA audio keystones	8300051
Cover for RCA insert 55x55 mm - Anthracite	830002305
Cover for RCA insert 55x55 mm - Silver	830002306
Cover for RCA insert 55x55 mm - Matt white	830002309
Cover for RCA insert 55x55 mm - Champagne	830002304

	HDMI
HDMI or Jack 3.5 mm insert support (without keystone and cover 8300025xx/8300027xx)	8300024
HDMI keystone	8300049
Cover for HDMI insert 55x55 mm - Anthracite	830002505
Cover for HDMI insert 55x55 mm - Silver	830002506
Cover for HDMI insert 55x55 mm - Matt white	830002509
Cover for HDMI insert 55x55 mm - Champagne	830002504

	Jack 3.5 mm	RCA	HDMI
4 colours available (anthracite/ matt white/champagne/silver)	✓	✓	✓
Connector type	Female	Female	Female (I/O)
Connection method	Screw	Screw	HDMI
Fixing mechanism	With screws. Optional claws	With screws. Optional claws	With screws. Optional claws
Internal connection fixing	Keystone	Keystone	Keystone
Norms	CE	CE	EN55022, EN55024 and IEC61000-4-5

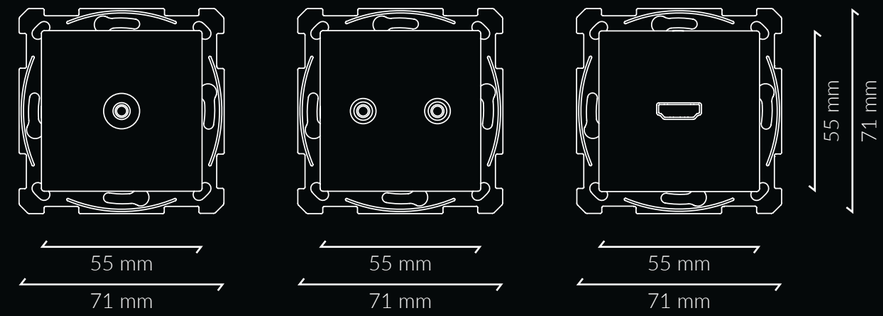

INDEX

References and specifications

	Cable outlet
Cable outlet insert (without cover 8300021xx)	8300020
Cable outlet cover 55x55 mm - Anthracite	830002105
Cable outlet cover 55x55 mm - Silver	830002106
Cable outlet cover 55x55 mm - Matt White	830002109
Cable outlet cover 55x55 mm - Champagne	830002104

	Blind cover
Metallic plate for ZS55 family	8300035
Blind cover 55x55 mm - Anthracite. Metallic plate (8300035) is needed but not included	830002805
Blind cover 55x55 mm - Silver. Metallic plate (8300035) is needed but not included	830002806
Blind cover 55x55 mm - Matt White. Metallic plate (8300035) is needed but not included	830002809
Blind cover 55x55 mm - Champagne. Metallic plate (8300035) is needed but not included	830002804

	Cable outlet	Blind cover
4 colours available (anthracite/matt white/champagne/silver)	✓	✓
Fixing mechanism	With screws. Optional claws	With screws. Optional claws

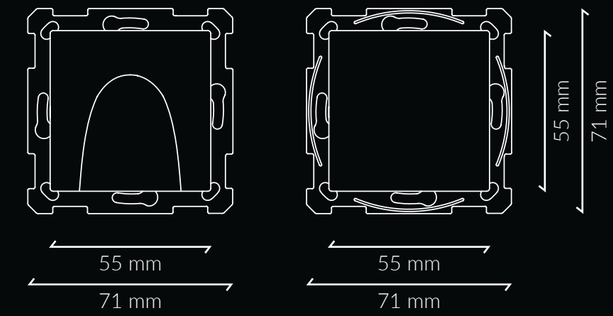

INDEX

References and specifications

	1-gang
1-gang frame - Anthracite	980000105
1-gang frame - Silver	980000106
1-gang frame - Matt white	980000109
1-gang frame - Champagne	980000104

	2-gang
2-gang frame - Anthracite	980000205
2-gang frame - Silver	980000206
2-gang frame - Matt white	980000209
2-gang frame - Champagne	980000204

	3-gang
3-gang frame - Anthracite	980000305
3-gang frame - Silver	980000306
3-gang frame - Matt white	980000309
3-gang frame - Champagne	980000304

	4-gang
4-gang frame - Anthracite	980000405
4-gang frame - Silver	980000406
4-gang frame - Matt white	980000409
4-gang frame - Champagne	980000404

	Frames
4 colours available (anthracite/matt white/champagne/silver)	✓
Flush finish with ZS55 series switches and accessories	✓
Portrait or landscape position	✓

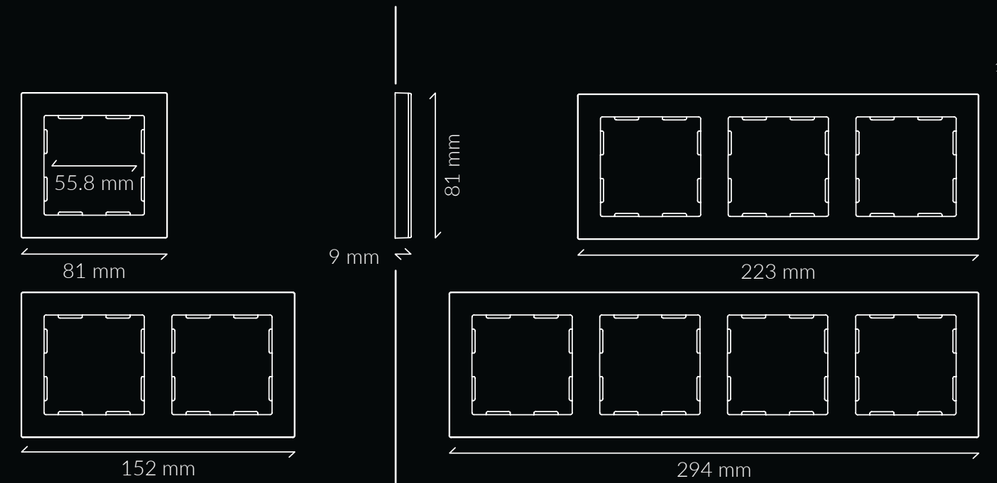

INDEX

Video Intercom

GetFace IP

The video intercom solution is ideal for any type of building, from single to multi-dwelling, student residences, hotels and office buildings. Adapt it to the building requirements thanks to its modular structure. Fully integrated into the smart home touch panels.

INDEX

Fully secured access

Make sure who is calling before opening thanks to the outdoor station with HR camera and IR light for night vision. Pick the required modules according to the type of building and the access features: call buttons, keypad, touch panel, RFID card access or even Bluetooth® access.

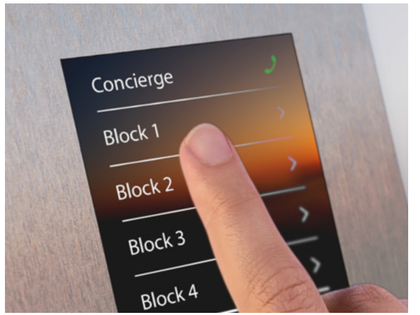

INDEX

Smart home integration

Pick up the calls in the Z50, Z70 or Z100 internal units with the best design and all the KNX control functionalities.

Z50

Z70

Z100

INDEX

Answer the call wherever you are

Receive calls on your phone anytime, anywhere. You can see who is calling before answering and grant access to the people you trust.

INDEX

References and specifications

	Surface installation
GetFace IP - Surface installation - Frame - 1 module - Nickel/Black	ZVP-CB1M / ZVPCB1MB
GetFace IP - Surface installation - Frame - 2 modules - Nickel/Black	ZVP-CB2M / ZVPCB2MB
GetFace IP - Surface installation - Frame - 3 modules - Nickel/Black	ZVP-CB3M / ZVPCB3MB
GetFace IP - Surface installation - Backplate - 1 module	ZVP-BPLA1
GetFace IP - Surface installation - Backplate - 2 modules	ZVP-BPLA2
GetFace IP - Surface installation - Backplate - 3 modules	ZVP-BPLA3
GetFace IP - Surface installation - Backplate - 2(w) x 2(h) modules	ZVP-BP2W2H
GetFace IP - Surface installation - Backplate - 2(w) x 3(h) modules	ZVP-BP2W3H
GetFace IP - Surface installation - Backplate - 3(w) x 3(h) modules	ZVP-BP3W3H

	ZVP-CAM	ZVP-WOCAM
HR 1280 x 960 px camera (angles 120°h, 90°V, 145°D)	✓	-
Night vision with IR light	✓	-
2W Speaker with LINEOUT (1VRMS) output	✓	✓
Microphone	✓	✓
Power supply: 12 VDC/2 A or PoE 48 VDC/0.32 A	✓	✓
Connection of additional modules	✓	✓
Configurable input (-30...30 VDC)	✓	✓
Active output (8-12 VDC/400 mA)	✓	✓
Relay output (30 V/1 A AC/DC)	✓	✓
Protection degree: IP54	✓	✓

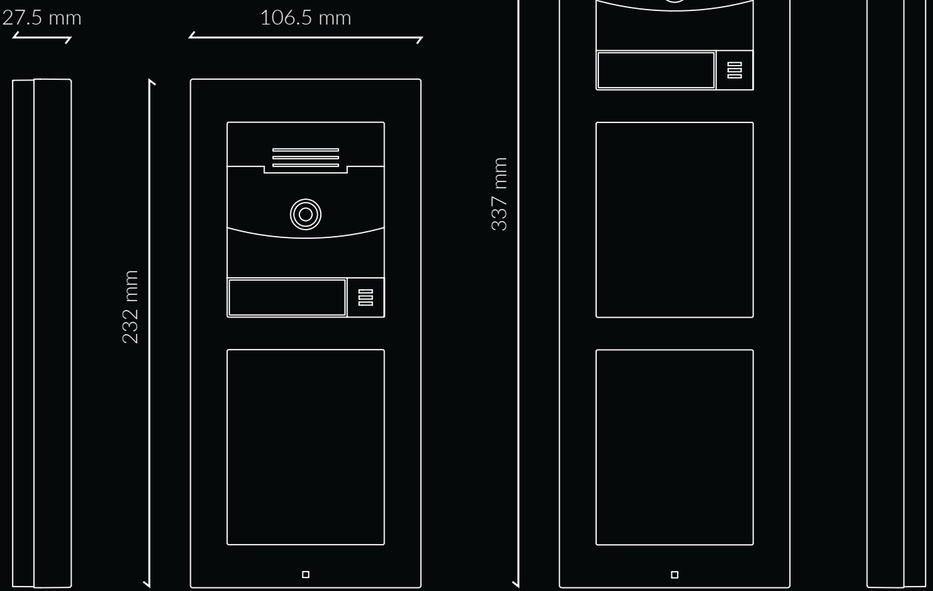

References and specifications

	Flush installation
GetFace IP - Flush installation - Frame - 1 module - Nickel/Black	ZVP-FFRA1 / ZVPFFRA1B
GetFace IP - Flush installation - Frame - 2 modules - Nickel/Black	ZVP-FFRA2 / ZVPFFRA2B
GetFace IP - Flush installation - Frame - 3 modules - Nickel/Black	ZVP-FFRA3 / ZVPFFRA3B
GetFace IP - Flush installation - Box - 1 module	ZVP-FBOX1
GetFace IP - Flush installation - Box - 2 modules	ZVP-FBOX2
GetFace IP - Flush installation - Box - 3 modules	ZVP-FBOX3

	ZVP-CAM	ZVP-WOCAM
HR 1280 x 960 px camera (angles 120°h, 90°V, 145°D)	✓	-
Night vision with IR light	✓	-
2W Speaker with LINEOUT (1VRMS) output	✓	✓
Microphone	✓	✓
Power supply: 12 VDC/2 A or PoE 48 VDC/0.32 A	✓	✓
Connection of additional modules	✓	✓
Configurable input (-30...30 VDC)	✓	✓
Active output (8-12 VDC/400 mA)	✓	✓
Relay output (30 V/1 A AC/DC)	✓	✓
Protection degree: IP54	✓	✓

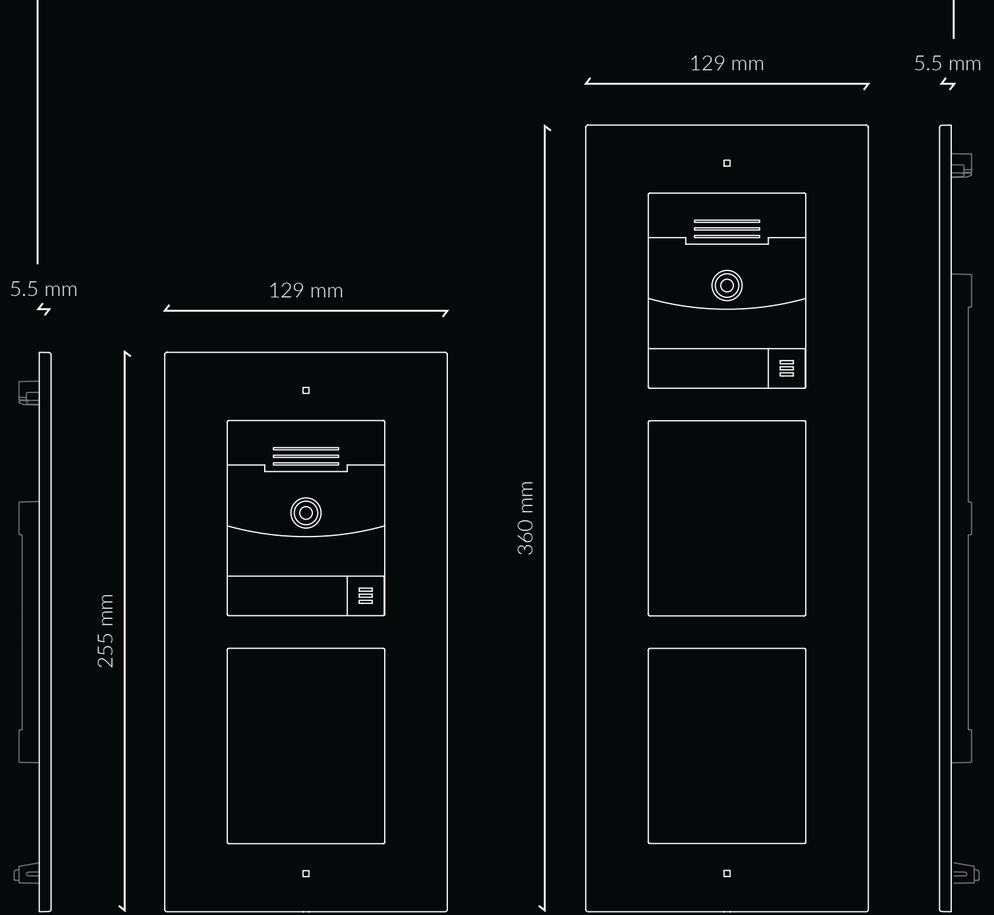

INDEX

References and specifications

	Modules / accessories
GetFace IP – 5-button module	ZVP-NAME5
GetFace IP – Keypad module	ZVP-KEYPAD
GetFace IP – Keypad module - Black	ZVPKEYPADB
GetFace IP – Touch display	ZVP-TOUCHD
GetFace IP – Info panel	ZVP-INFOP
GetFace IP – RFID card reader	ZVPRFSMNV2
GetFace IP – RFID card reader and Bluetooth module	ZVPRFBT
GetFace IP – Induction loop module	ZVP-ILOOP
GetFace IP – Vigik module	ZVP-VIGM
GetFace IP – I/O module	ZVP-INOUT
GetFace IP – Tamper switch	ZVP-ACTAM
GetFace IP – Security relay	ZVP-ACSR
GetFace IP – Blind panel	ZVP-ACBLP
GetFace IP – Blind button	ZVP-ACBLB

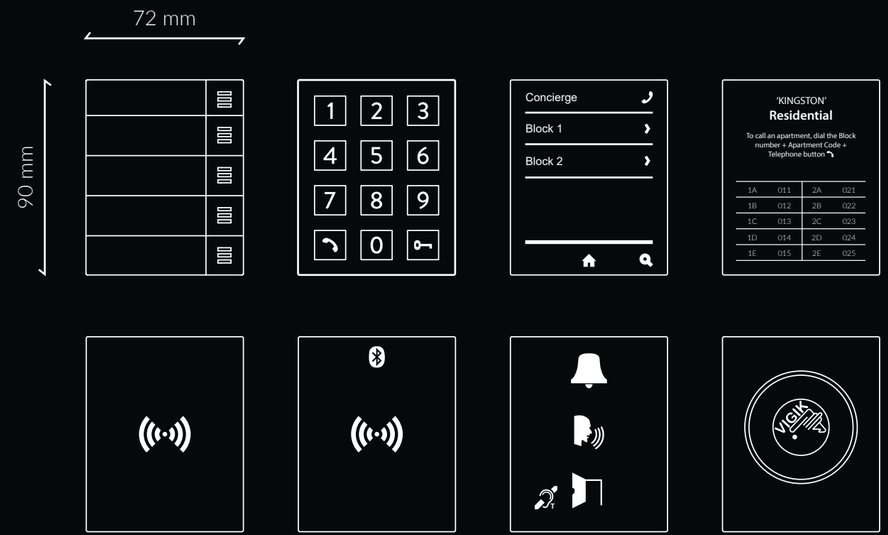

INDEX

IWAC Display

IWAC Out

IWAC Out Keypad

Access control

Z-Access

IWAC Display - IWAC Out - IWAC Out Keypad

We had a wish list...
and we made it happen!

- Aesthetically attractive and customizable (IWAC Display) access controls
- A system that works off-line, even if there is no network communication
- We want to know if guests are in the room without having to knock on the door
- We need to know if the guest has selected "do not disturb" or "make up room" from outside the room
- Integrated doorbell

Anything else? All you have to do is ask!

INDEX

IWAC Display

Free the door from the weight of any access control hardware thanks to IWAC Display, a device that can also display the room number and the "do not disturb" or "make up room" status selected by the guest.

IWAC Display installed in the luxurious Boutique Boho Club hotel (Marbella - Spain).

Customization is the key

In any interior design project, all elements in a room must maintain cohesion in aesthetics, colors, and shapes.

The IWAC Display stands out for its tempered glass printed customization, offering a tailored access control solution that integrates seamlessly with your design.

INDEX

IWAC Out

A waterproof version of IWAC.

This outdoor version is not only weather and impact resistant, but it is also KNX Secure for a secure communication via the KNX bus.

INDEX

Z-Access

Everything under control thanks to Z-Access, our card writing and Bluetooth® key generating software. Z-Access allows room access reports for guests and staff, knowing who has written new cards or cancelling existing keys so they are no longer valid.

Z-Access communicates with all door readers, IWAC Display and IWAC Out, and, magic! It can work offline.

Online check-in? Bluetooth® access?

Yes, thanks to Zennio Key

Getting to a hotel and avoiding queues at reception just to pick up your keys is everybody's dream. We make it possible thanks to Bluetooth® opening, which allows guests to receive their room keys in their phones before they get to the hotel.

INDEX

IWAC Out Keypad

Open the door to a world of possibilities.

Experience the convenience of easy-to-use, weather-resistant access control, designed to control access to apartments, offices, and any other spaces in need of intelligent security.

You will never have to worry about leaving your keys behind again, in fact, what keys?

References and specifications

	IWAC Display	IWAC Out	IWAC Out Keypad
Backlit icons	✓	-	✓
Customizable	✓	-	-
2.4" OLED display	✓	-	-
Installation in European or British standard mounting box	✓	-	-
Available colours	Anthracite, silver and white	Anthracite and white	Anthracite and white
Number of buttons	3	1	Keypad
2 analogue-digital inputs	✓	-	-
Integration with Z-Access	✓	✓	-
Standalone operation	-	-	✓
Suitable for outdoor installation	IP20	IP56	IP56
Secure opening	Encrypted	KNX Secure	KNX Secure
Opening	Bluetooth and NFC	Bluetooth and NFC	PIN access

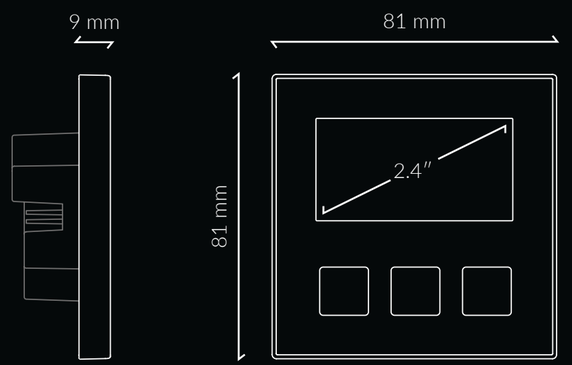

ZVIIWACDV3

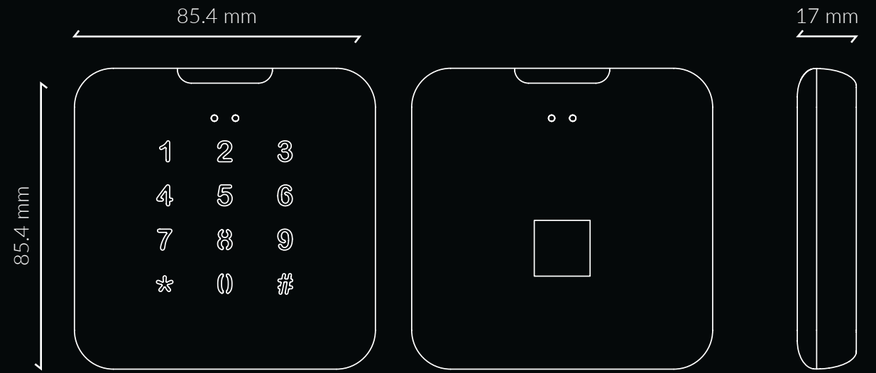

ZVIIWOK

ZVIIWO

INDEX

Actuators

Where the magic is done

A complete range of the most powerful actuators in the market. In the following pages, you will discover the non-visible part of KNX installations.

Actuators for HVAC, lighting, shutter control, multifunctional, all-in-one solutions, multimedia, energy monitoring...

INDEX

12 DIN

8 DIN

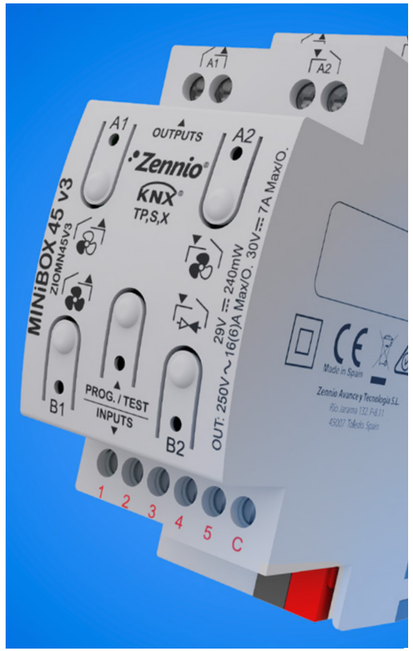

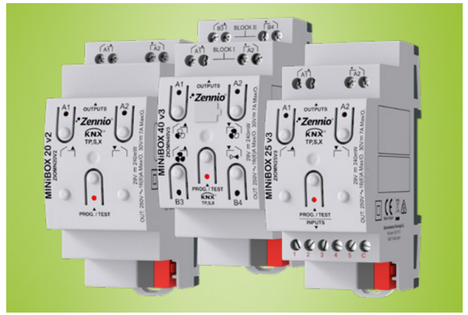

2 DIN

INDEX

DC INPUT 12 - 40V
R
COLOUR SHIFT
Zennio
KNX TP,S,X
RGBW
TW SELECT
POWER
TW1
PROG. / TEST
TW2
SERVICE ONLY
Lumento DX4 v2
ZDILDX4V2
R,1,CW1
G,2,WW1
B,3,CW2
W,4,WW2
DC INPUT: 12 - 40V
POWER KNX: 29V
OUTPUT 12-40V IMax: 20 A. IOut: 8A / Channel
R OUT: 250V 16(6)A Max. 30V 7A Max.
29V

inBOX 24 v3
Zennio
KNX TP,S
OUTPUTS
INPUTS

Zennio
KLIC-TS

Zennio
QUAD Plus
KNX

Zennio
KNX TP,S
DALI BOX Interface 64 v3
OK
29V

Zennio
KNX TP,S,X
DALI BOX Broadcast 6CH v2
29V

Zennio
KNX TP,S
NarrowDIM X4
29V

Multifunction actuators

KNX multifunction actuators with outputs to be configured as shutter channel, individual output, or even fan coil actuator.

Models with analogue-digital inputs allowing you to configure them as multifunction binary inputs, for sensors or potential-free push buttons, as inputs for temperature probes or as inputs for motion sensors. A logical function module is included.

Product	Reference	Outputs	Inputs	Mounting	KNX Secure
inBOX 20 v3	ZIOIB20V3	2 (16 A C-Load)	-	Flush	-
inBOX 24 v3	ZIOIB24V3	2 (16 A C-Load)	4	Flush	-
MINiBOX 20 v2	ZIOMN20V2	2 (16 A C-Load)	-	2 DIN	Yes
MINiBOX 25 v3	ZIOMN25V3	2 (16 A C-Load)	5	2 DIN	Yes
MINiBOX 40 v3	ZIOMN40V3	4 (16 A C-Load)	-	2 DIN	Yes
MINiBOX 45 v3	ZIOMN45V3	4 (16 A C-Load)	5	2 DIN	Yes
MAXinBOX 8 v4	ZIOMB8V4	8 (16 A C-Load)	-	4.5 DIN	Yes
MAXinBOX 12	ZIOMB12	12 (16 A C-Load)	-	6 DIN	Yes
MAXinBOX 1212	ZIOMB1212	12 (16 A C-Load)	12	6 DIN	Yes
MAXinBOX 16 v4	ZIOMB16V4	16 (16 A C-Load)	-	8 DIN	Yes
MAXinBOX 20	ZIOMB20	20 (16 A C-Load)	-	10 DIN	Yes
MAXinBOX 24 v2	ZIOMB24V2	24 (16 A C-Load)	-	12 DIN	-
MAXinBOX 66 v3	ZIOMB66V3	6 (16 A C-Load)	6	4.5 DIN	Yes

Binary actuators

Actuators with individual outputs, ideal for industrial applications thanks to the power relay which is able to switch high currents of up to 20 A. A logical function module is included and you can manually activate the relay without needing a power supply.

Product	Reference	Outputs	Mounting	Current measurement	KNX Secure
IndustrialBOX 4	ZIOINB4	4 (20 A C-Load)	4 DIN	-	Yes
IndustrialBOX Current 4	ZIOINBC4	4 (20 A C-Load)	4 DIN	Yes	Yes

Shutter actuators

KNX shutter actuators for Din-rail installation. The control is performed through the rise and fall times. They allow manual control of the outputs, and their status can be visualized through the LED indicators. A logical function module is included.

Product	Reference	Description	Mounting	KNX Secure
MAXinBOX SHUTTER 4CH v3	ZIOMBSH4V3	4 shutter channels	4.5 DIN	Yes
MAXinBOX SHUTTER 8CH v3	ZIOMBSH8V3	8 shutter channels	8 DIN	Yes
Shutter Coupler 1CH	ZAC-SHUC1C	Coupler AC/DC 1CH	2 DIN	-
Shutter Coupler 2CH	ZAC-SHUC2C	Coupler AC/DC 2CH	2 DIN	-
ShutterBOX Drive 2X	ZIOSHD2	2 channels - auto detection	2 DIN	Yes
ShutterBOX Drive 4X	ZIOSHD4	4 channels - auto detection	4 DIN	Yes
ShutterBOX Drive 6X	ZIOSHD6	6 channels - auto detection	6 DIN	Yes
ShutterBOX Drive 8X	ZIOSHD8	8 channels - auto detection	8 DIN	Yes

All-in-one actuators

Multifunction devices under the all-in-one concept. They include in a single device: KNX power supply, KNX-IP interface, thermostats, logical modules, analogue-digital inputs and outputs which, depending on the model, can be configured as individual outputs, shutters and/or fan coil controller.

Product	Reference	Power supply	Outputs	Inputs	Mounting	KNX Secure
ALLinBOX 1612 v3	ZPR1612V3	640 mA	16 (16 A C-Load)	12	12 DIN	Yes
ALLinBOX 88 v2	ZPR88V2	320 mA	8 (16 A C-Load)	8	8 DIN	Yes
ALLinBOX 46 v2	ZPR46V2	160 mA	4 (16 A C-Load)	6	4.5 DIN	Yes
ALLinBOX Hospitality v2	ZPRHPV2	160 mA	4 (fan coil) + 1 (16 A C-Load)	6	4.5 DIN	Yes

0-10 V inputs/outputs actuator

Multifunction actuators with 1/2/3 analogue inputs/outputs channels, configurable as 0-10 V outputs, 0-10 V inputs or 4-20 mA inputs. Each channel can be configured individually or jointly to control a 2/4 pipe fan coil in which either the fan, the valves or both are regulated by a 0-10V signal. A logical function module and thermostats are included.

Product	Reference	Description	Mounting
MINiBOX 0-10V X3	ZIO3X010	3 channels 0-10 V outputs/ 0-10V or 4-20 mA inputs	2 DIN
MINiBOX 0-10V X2	ZIO2X010	2 channels 0-10 V outputs/ 0-10V or 4-20 mA inputs	2 DIN
MINiBOX 0-10V X1	ZIO1X010	1 channels 0-10 V outputs/ 0-10V or 4-20 mA inputs	2 DIN

Dimmable lighting

Universal dimming actuators (RLC, LED, CFL). Auto load type detection (RLC). Configurable dimming curves for LED and CFL. An independent logical function module is included. Error detection: short circuit, power failure, voltage surge, overheating, anomalous frequency and parameterization error.

Product	Reference	Channels	Power (230 V)	Mounting
DIMinBOX DX4	ZDIDBDX4	4	300 W	8 DIN
NarrowDIM X4	ZDINDX4	4	210 W	4.5 DIN
DIMinBOX DX2	ZDI-DBDX2	2	310 W	4.5 DIN
NarrowDIM X2	ZDINDX2	2	210 W	2 DIN
DIMinBOX DX1	ZDIDBDX1	1	350 W	2 DIN
inBOX DIM	ZDI-IBD	1	250 W	Flush

LED lighting

LED dimmers (RGBW or single channels) oriented to DC LED technology with constant voltage or constant current regulation through PWM. The dimming channels can be configured as independent channels or 1 RGB(W) channel. They incorporate manual test buttons to check the channels functioning.

Product	Reference	Channels	Dimming	Mounting	KNX Secure
Lumento C3	ZDI-RGBCC3	3	Constant current (220 mA - 1 A)	Flush	-
Lumento C4	ZDI-RGBCC4	4	Constant current (220 mA - 1 A)	Flush	-
Lumento X2 v2	ZDILX2V2	2 + 1 relay (16A)	Constant voltage (12/24 VDC)	Flush	Yes
Lumento X3 v2	ZDILX3V2	3 + 1 relay (16A)	Constant voltage (12/24 VDC)	Flush	Yes
Lumento X4 v2	ZDILX4V2	4 + 1 relay (16A)	Constant voltage (12/24 VDC)	Flush	Yes
Lumento DX4 v2	ZDILDX4V2	4 + 1 relay (16A)	Constant voltage (12-30 VDC)	4.5 DIN	Yes

DALI lighting

Interfaces for the control of DALI certified lighting through the KNX bus.

DALI broadcast interfaces allow a plug&play configuration without needing to configure anything on the DALI side, whereas DALI-BOX Interface allows to perform the ballasts assignment and creating up to 64 groups (48 single-ballast and 16 multi-ballast).

Product	Reference	Channels	Ballasts	Mounting	KNX Secure
DALI BOX Broadcast 4CH v2	ZDIDLB4V2	4	250(total) / 64 channel	4.5 DIN	Yes
DALI BOX Broadcast 6CH v2	ZDIDLB6V2	6	250(total) / 64 channel	4.5 DIN	Yes
DALI BOX Interface 64 v3	ZDID64V3	1	64	4.5 DIN	-
DALI BOX Interface 64 X2	ZDID64X2	2	128(total) / 64 channel	4.5 DIN	Yes
inBOX DALI 16	ZDIIBD16	1	16	Flush	Yes

Climate - Heating

KNX actuators for the control of heating valves, such as radiators or underfloor heating.

CLIMATE WATER CIRCUITS

Product	Reference	Channels	Inputs	Control voltage	Mounting
HeatingBOX 230V 2X v2	ZCL2H230V2	2	2	230 VAC	2 DIN
HeatingBOX 230V 4X v2	ZCL4H230V2	4	4	230 VAC	2 DIN
HeatingBOX 230V 6X v2	ZCL6H230V2	6	6	230 VAC	4 DIN
HeatingBOX 230V 8X v2	ZCL8H230V2	8	8	230 VAC	4 DIN
HeatingBOX 24V 4X	ZCL-4HT24	4	-	24 VAC/VDC	2 DIN
HeatingBOX 24V 8X	ZCL-8HT24	8	-	24 VAC/VDC	4.5 DIN

Climate - Ventilation

Actuators for the control of ceiling fan units powered at 230 VAC.

CEILING FANS

Product	Reference	Fanspeeds	Control voltage	Mounting
FANinBOX 110V 1CH	ZCLFB110C1	4	110 VAC	2 DIN
FANinBOX 230V 1CH	ZCLFB230C1	4	230 VAC	2 DIN

Climate - Zoning

Actuators for zoning ducted air-conditioning systems, which allow the control of motorized 12/24 VDC grilles. The device includes an advanced zoning logic, allowing to send orders to the interface that controls the air generation system according to the status of the zones.

ZONING DUCTED AIR CONDITIONING

Product	Reference	Zones	Control voltage	Mounting
ZoningBOX 4	ZCL-ZB4	4	12/24 VDC	4.5 DIN
ZoningBOX 6	ZCL-ZB6	6	12/24 VDC	4.5 DIN
IRSC-ZONE	ZN1CL-IRSC	8	-	Flush

Climate - Fan coil

KNX actuators for the control of 2 or 4-pipe fan coils whose valves and/or fans are controlled with 0-10V signals.

FAN COIL WITH 0-10 VDC CONTROL

Product	Reference	Fan coil units	Type	Control 0-10 V	Mounting	KNX Secure
MAXinBOX FC 0-10V FAN	ZCL-FC010F	2	2/4 pipe	Fan	4.5 DIN	-
MAXinBOX FC 0-10V VALVE	ZCL-FC010V	1	2/4 pipe	Valve	4.5 DIN	-
MINiBOX 0-10V X3	ZIO3X010	3	2/4 pipe	Both	2 DIN	-
MINiBOX 0-10V X2	ZIO2X010	2	2/4 pipe	Both	2 DIN	-
MINiBOX 0-10V X1	ZIO1X010	1	2/4 pipe	Both	2 DIN	-

Climate - Fan coil

KNX actuators for control of 2 or 4-pipe fan coils. In our range of fan coil actuators you will find versions for control via conventional relays; on/off relays for valves and step controlled fans.

FAN COIL WITH ON/OFF VALVES AND FAN CONTROLLED THROUGH RELAYS

Product	Reference	Fan coil units	Type	Inputs	Mounting	KNX Secure
MAXinBOX 88	ZIOMB88	2	2-pipe	8	4 DIN	Yes
MAXinBOX 8 v4	ZIOMB8V4	2	2-pipe	-	4.5 DIN	Yes
MAXinBOX 12	ZIOMB12	3	2-pipe	-	6 DIN	Yes
MAXinBOX 16 v4	ZIOMB16V4	4	2-pipe	-	8 DIN	Yes
MAXinBOX 20	ZIOMB20	5	2-pipe	-	10 DIN	Yes
MAXinBOX 24 v2	ZIOMB24V2	6	2-pipe	-	12 DIN	Yes
MINiBOX 40 v3	ZIOMN40V3	1	2-pipe	-	2 DIN	Yes
MINiBOX 45 v3	ZIOMN45V3	1	2-pipe	5	2 DIN	Yes
MAXinBOX Hospitality v3	ZCLHP126V3	1	2/4 pipe	6	4.5 DIN	Yes
ALLinBOX 1612 v2	ZPR1612V2	2	2/4 pipe	12	12 DIN	-
ALLinBOX 88	ZPR88	2	2/4 pipe	8	8 DIN	-
ALLinBOX 46	ZPR46	1	2-pipe	6	4.5 DIN	-
ALLinBOX Hospitality	ZPRHP	1	2-pipe	6	4.5 DIN	-

FAN COIL WITH 3-POINT VALVE

Product	Reference	Fan coil units	Type	Inputs	Mounting	KNX Secure
MAXinBOX Hospitality v3	ZCLHP126V3	1	2/4 pipe	6	4.5 DIN	Yes
ALLinBOX 1612 v2	ZPR1612V2	1	2/4 pipe	12	12 DIN	-
ALLinBOX 88	ZPR88	1	2/4 pipe	8	8 DIN	-

Climate - Air conditioning

Bidirectional climate interfaces that allow the control of indoor units of the main climate manufacturers in the market from the KNX system.

BIDIRECTIONAL CONTROL OF AIR CONDITIONING UNITS

Product	Reference	Control range	Inputs	Mounting
KLIC-DD v3	ZCLDDV3	Daikin - Domestic range	2	Flush
KLIC-DI v2	ZCLDIV2	Daikin - Industrial range	2	2 DIN
KLIC-MITT v3	ZCLMITTV3	Mitsubishi Electric	2	Flush
KLIC-LG1	ZCL-LG1	LG	3	Flush
KLIC-FJ	ZCL-FJ	Fujitsu, General, Hiyasu y Fuji Electric	3	Flush
KLIC-FJT	ZCLFJT	Fujitsu, General, Hiyasu y Fuji Electric	2	Flush
KLIC-TS	ZCL-TS	Toshiba	3	Flush
KLIC-PA	ZCLPA	Panasonic	3	Flush
KLIC-SG	ZCLSG	Samsung (industrial & VRF)	2	2 DIN

UNIDIRECTIONAL CONTROL OF AIR CONDITIONING UNITS

Product	Reference	Control range	Inputs	Mounting
IRSC Plus	ZN1CL-IRSC	All brands	-	Flush

Climate - Aerothermal systems

Bidirectional communication interfaces for the integration of aerothermal units into the KNX installation.

BIDIRECTIONAL CONTROL OF AEROTHERMAL UNITS

Product	Reference	Control range	Inputs	Mounting
KLIC-DA v2	ZCLDAV2	Daikin - Altherma and Altherma 3 LT	2	2 DIN
KLIC-MITTE	ZCLMITTE	Mitsubishi Electric - Ecodan	2	Flush

Universal interfaces

KNX universal interfaces with channels configurable as binary inputs and/or LED outputs. Binary inputs can be configured as sensors, switches or potential-free push buttons. Binary outputs can be used for low current LED control. These also include an input for a temperature probe and a thermostat module.

Product	Reference	Description	Mounting
BIN-T 2X	ZIOBINT2	2 binary inputs/LED outputs	Flush
BIN-T 4X	ZIOBINT4	4 binary inputs/LED outputs	Flush
BIN-T 6X	ZIOBINT6	6 binary inputs/LED outputs	Flush
BIN-T 8X	ZIOBINT8	8 binary inputs/LED outputs	Flush

Multifunction inputs

Analogue-digital inputs modules, which can be configured as multifunction binary inputs, as inputs for temperature probes or as inputs for connecting motion sensors. Thermostats are included.

Product	Reference	Inputs	Thermostats	Mounting
QUAD Plus	ZIO-QUADP	4	4	Flush
RailQUAD 8	ZIO-RQUAD8	8	8	2 DIN

Sensors - Presence/motion sensors

Motion and presence sensors for wall or ceiling mounting.

It is possible to restrict the motion detection depending on the ambient luminosity, except for the RF motion sensors which, in return, count with the great advantage of no requiring wiring.

Product	Reference	Luminosity	Temperature sensor	CO_2/ Humidity sensor	Installation	Range (Ø)	BCU KNX
Presentia C v2	ZPDC30LV2	Yes	Yes	-	Ceiling	30 m	Yes
Presentia C Multisensor	ZPDCMS	Yes	Yes	Yes	Ceiling	30 m	Yes
Presentia W0 v2	ZPDW0V2	Yes	-	-	Wall	10 m	Yes
Presentia W1 v2	ZPDW1V2	Yes	-	-	Wall	10 m	Yes
Presentia W2 v2	ZPDW2V2	Yes	-	-	Wall	10 m	Yes
EyeZen TP v2	ZPDEZTPV2	Yes	-	-	Ceiling	6 m	Yes
EyeZen IN	ZPDEZIN	Yes	-	-	Ceiling	6 m	-
EyeZen RF 868	ZPDEZRF868	-	-	-	Ceiling	6 m	Yes (RF)

Sensors - Temperature and humidity sensors

Temperature sensors, indispensable accessory in a room for the correct climate regulation. Connected to analogue-digital inputs of our KNX devices, or use Flat Sensato, directly connected to the KNX bus, including humidity measurement.

Product	Reference	Description	BCU KNX
Flat AmbienT	ZACFAT	Temperature sensor	-
SQ-AmbienT	ZAC-SQAT	Temperature sensor	-
Flat Sensato v2	ZSFSENV2	Temperature and humidity sensor	Yes
NTC temperature probe	ZACNTC	NTC temperature probe	-
Temperature probe - mini NTC	9900015	10K NTC temperature sensor	-

Sensors - Door/window sensors

KNX-RF sensors for wireless installation in doors or windows, which notify the KNX bus when the door/window is open or closed.

Product	Reference	Description	BCU KNX
WinDoor RF	ZRFWDV2	KNX RF door/window sensor (868 MHz)	Yes (RF)

Multimedia

AudioInRoom is an audio system for playing music via bluetooth for up to two rooms, with auxiliary input.

IRSC Open allows the integration of audio/video equipment into the KNX installation, acting as an IR remote controller.

Product	Reference	Description
AudioInRoom	ZMU-AUIR	KNX audio controller with Bluetooth and auxiliary input. 4 Outputs (10W)
IRSC OPEN	ZN1CL-IRSC	Infrared audio/video controller

Energy saving

Interfaces for monitoring the consumption in the installations. They can measure electrical consumption, gas or water consumption or energetic consumption.

Product	Reference	Description	Mounting
KCI 4 S0	ZRX-KCI4S0	KNX interface for 4 consumption meters with S0 pulses	2 DIN
KES Plus	ZIO-KESP	KNX electrical energy meter	2 DIN
KEM	ZEMKEM	KNX energy monitor	4.5 DIN

KNX system elements

Indispensable elements for a correct functioning of the KNX installation: KNX universal power supplies (110/230 VAC) and auxiliary output, KNX-IP and KNX-USB secure interfaces for programming and monitoring, with extended frames for shorter downloads (APDU > 240 bytes), line couplers and KNX-RF media couplers.

Product	Reference	Description	Mounting
KUPSupply 160mA	ZPSU160	KNX universal power supply 160mA with 29VDC auxiliary output	2 DIN
KUPSupply 320mA	ZPSU320	KNX universal power supply 320mA with 29VDC auxiliary output	4.5 DIN
KUPSupply 640mA	ZPSU640	KNX universal power supply 640mA with 29VDC auxiliary output	4.5 DIN
Linecoupler CL	ZSYLCCL	KNX linecoupler	2 DIN
KNX USB SC	ZSYUSBSC	KNX-USB interface	2 DIN
KIPI SC	ZSYKIPISC	Zennio KNX-IP Interface. KNX Secure	2 DIN
IP Router CL	ZSYIPRCL	KNX-IP Router interface	2 DIN
ZMCoup RF 868	ZRFMC868	KNX TP-RF media coupler (868 MHz)	Flush

Radiofrequency

Devices for the control through the KNX RF standard (868 / 915 MHz).

Product	Reference	Description	Frequency
ZMCoup RF 868	ZRFMC868	KNX TP-RF media coupler	868 MHz
WinDoor RF	ZRFWDV2	KNX RF door/window sensor	868 MHz
EyeZen RF 868	ZPDEZRF868	KNX RF motion sensor for ceiling mounting	868 MHz

All trademarks or right of any kind, registered names, logos or insignias, used or cited in this catalogue, are the sole property of their respective owners.

Product pictures may differ to the real product. Zennio reserves the right to change the pictures and product specifications in any moment without advanced notice.

ZNCAT-25-EN-V1.0

www.zennio.com